Instruction Manual 0101-8261-4
L&SP 5715A

Temescal

Electron Beam Power Supplies
Models CV-14 and CV 14 A and B

(CV-14: 0407-4340-1-9; 0411-8260-1-9)
(CV-14 A: 0506-2810)
(CV-14 B: 0506-2920)

Edwards

Temescal, an operating unit of
Edwards High Vacuum International, a division of The BOC Group, Inc.
2850 Seventh Street, Berkeley, CA 94710: Telephone: 415-841-5720; FAX: 415-548-8108

CONTENTS

SUMMARY OF TERMS AND CONDITIONS OF SALE

MECHANICAL WARRANTY: For a period of twelve (12) months from the date of original shipment to Purchaser thereof, the apparatus and each part or component manufactured by Temescal, a division of The BOC Group, Inc., is warranted to be free from functional defects in materials and workmanship. The foregoing warranty is subject to the condition that the apparatus, part or component be properly operated under conditions of normal use and that regular periodic maintenance and service be performed or replacements made in accordance with instructions provided by Temescal. The foregoing warranty shall not apply to any apparatus, part or component that has been repaired other than by Temescal or an authorized Temescal representative or in accordance with written instructions provided by Temescal; that has been altered by anyone other than Temescal; or that has been subject to improper installation or abuse, misuse, negligence, accident or corrosion.

Purchaser's sole and exclusive remedy under the above warranty is limited to, at Temescal's option, repair or replacement of defective parts or components or return to Purchaser of the price of the apparatus. Any such obligation on Temescal's part is subject to the following requirements: (x) the defect must be promptly reported to Temescal; (y) if so advised by Temescal, Purchaser must return the part or component with a statement of the observed deficiency not later than seven (7) days after the expiration date of the warranty to the address designated by Temescal, during normal business hours, transportation charges prepaid; and (z) upon examination by Temescal, the part or component must be found not to comply with the above warranty. Return trip transportation charges for the part or component shall be paid by Purchaser. In the event that Temescal elects to refund the purchase price, the apparatus shall be the property of Temescal and shall be promptly shipped to Temescal at Temescal's expense. This Mechanical Warranty shall be void and the apparatus shall be deemed to be purchased AS IS in the event that the entire purchase price has not been paid within thirty (30) days of original shipment of the apparatus.

THERE ARE NO EXPRESS OR IMPLIED WARRANTIES THAT EXTEND BEYOND THE WARRANTY HEREINABOVE SET FORTH. THERE IS NO WARRANTY OF MERCHANTABILITY OR FITNESS FOR A PARTICULAR PURPOSE WITH RESPECT TO THE APPARATUS OR ANY PART OR COMPONENT THEREOF AND NO WARRANTY SHALL BE IMPLIED BY LAW.

Items not of Temescal's manufacture but resold by Temescal are the products of other manufacturers and their warranty, if any, shall apply. THERE ARE NO WARRANTIES OF ANY KIND ON PRODUCTS OF OTHER MANUFACTURERS RESOLD BY TEMESCAL, EXCEPT THE WARRANTY OF TITLE, AND NO WARRANTIES SHALL BE IMPLIED BY LAW. THERE IS NO EXPRESS OR IMPLIED WARRANTY OF MERCHANTABILITY OR OF FITNESS FOR A PARTICULAR PURPOSE WITH RESPECT TO PRODUCTS OF OTHER MANUFACTURERS.

PERFORMANCE WARRANTY: Temescal warrants that the apparatus will comply with the specifications set forth in the purchase order. All specifications are subject to the corrections and tolerances allowed by the NEC. If the purchase order expressly provides for factory testing to verify compliance with the specifications, the Purchaser shall be entitled to witness the testing and the results of the testing. Upon demonstration of compliance with the specifications by factory testing, Temescal's liability for failure to comply with the specifications shall terminate. In the event that the purchase order does not describe a comprehensive test program for demonstration of compliance with the specifications, Temescal's test program (which may incorporate extrapolation of data or test results based upon similarity of criteria established by Temescal) shall be used for such purpose.

If the purchase order does not expressly provide for factory testing, compliance with the specifications shall be demonstrated by field testing which shall be conducted by Purchaser at Purchaser's expense. Temescal shall have the right to: (a) witness the field testing and to verify the results of such field testing; (b) have free access to all data compiled by the Purchaser in connection with any field test; and (c) conduct its own field test at its own expense during any 14-day consecutive period which may be mutually agreed upon by Temescal and the Purchaser; provided, however, that Temescal shall have the right to field test within six months of receipt from the Purchaser of any notice of failure to comply with the specifications. If compliance with the specifications is to be demonstrated by field testing, the Purchaser shall conduct and complete all field testing within sixty (60) days of the original shipment of the apparatus and shall promptly notify Temescal of any failure to comply with the specifications. Temescal shall not be liable for any failure to comply with the specifications demonstrated by field testing

unless it receives notice thereof within sixty-seven (67) days of the date of original shipment of the apparatus.

In the event that factory testing or field testing does not demonstrate compliance with the specifications, the Purchaser's sole and exclusive remedy under the above warranty is limited to, at Temescal's option, repair or replacement of defective parts or components or return to the Purchaser of the purchase price of the apparatus. In the event that Temescal elects to refund the purchase price, the apparatus shall be the property of Temescal.

Any obligations on Temescal's part under this Performance Warranty are subject to the following requirements: (x) the nature of the failure of the apparatus to comply with the specifications must be promptly reported to Temescal in writing; (y) if the apparatus has been delivered and field tested, the Purchaser must return the apparatus or any part or component to Temescal upon its request, not later than sixty-seven (67) days after initial shipment to Purchaser, to the address designated by Temescal, during normal business hours, transportation charges prepaid; and (z) upon examination and testing by Temescal, the apparatus must be found not to comply with the specifications. Return trip transportation charges for the apparatus or any part or component shall be paid by the Purchaser. This Performance Warranty shall be void and the apparatus shall be deemed to be purchased AS IS in the event that the entire purchase price has not been paid within thirty (30) days of original shipment of the apparatus.

THERE ARE NO EXPRESS OR IMPLIED WARRANTIES THAT EXTEND BEYOND THE WARRANTY HEREINABOVE SET FORTH. THERE IS NO WARRANTY OF MERCHANTABILITY OR FITNESS FOR A PARTICULAR PURPOSE WITH RESPECT TO THE APPARATUS OR ANY PART OR COMPONENT THEREOF AND NO WARRANTY SHALL BE IMPLIED BY LAW.

DISCLAIMER OF LIABILITY: IN NO EVENT SHALL TEMESCAL BE LIABLE FOR DIRECT, INDIRECT, SPECIAL, INCIDENTAL, OR CONSEQUENTIAL DAMAGES, ARISING FROM ANY SOURCE such as, but not limited to, the manufacture, use, delivery (including late delivery) or transportation of any apparatus, part or component sold to Purchaser, whether such damages are caused by Temescal's negligence or otherwise. Without limiting the generality of the foregoing sentence, Temescal shall not be liable for: the cost of capital; the cost of substitute apparatus, services, repairs, components or parts; loss of profit or revenue; the cost of power whether purchased or produced by the consumer thereof; loss of use of the apparatus or any part thereof, or any other property owned by Purchaser; claims or costs of Purchaser's customers; injury to persons or death; or damages to any property. In the event that any limited warranty or disclaimer of liability is found to be unlawful or inapplicable, or to have failed of its essential purpose, Temescal's liability shall be limited to the amount paid by Purchaser for the apparatus.

Edwards

Temescal, an operating unit of
Edwards High Vacuum International, a division of The BOC Group, Inc.
2850 Seventh Street, Berkeley, CA 94710: Telephone: 415-841-5720; FAX: 415-548-8108

USER RESPONSIBILITY

This equipment will perform in accordance with the instructions and information contained in the user's manual, and its referenced documents, when such equipment is installed, operated, and maintained in compliance with such instructions. The equipment must be checked periodically. Defective equipment shall not be used. Parts that are broken, missing, plainly worn, distorted, or contaminated, shall be replaced immediately. Should such repair or replacement become necessary, Temescal recommends that a telephonic or written request for service be made to Temescal.

The equipment, or any of its parts, shall not be altered without the prior written approval of Temescal. The user and/or purchaser of this equipment shall have the sole responsibility for any malfunction which results from improper use, faulty maintenance, damage, improper repair or alteration by any party other than Temescal.

SAFETY INSTRUCTIONS FOR OPERATING AND MAINTENANCE PERSONNEL

DANGER: HIGH VOLTAGE!!

1. Before servicing or operating this equipment, read all the component manuals supplied with the system, paying special attention to any safety precautions.
2. Before servicing this equipment, disconnect the electrical power at the main power switch. This switch should have a *lock-out* feature. Lock the power off and keep the key with you while working on the equipment.
3. Before entering any service area, use the special grounding hook (provided) to short out all voltages from the various high voltage parts and conductors.
4. Certain electrical components (e.g., electrolytic capacitors) hold a lethal voltage even after the main power is turned off. *BE SURE* such components have been discharged by shorting the B+ terminals to ground before starting any repairs.
5. Be sure the equipment is connected to a power receptacle having the correct polarity and grounding as prescribed by the National Electrical Code. Refer to the power supply section of the instructions to determine the proper electrical ground.
6. Never leave loose ends on high voltage connections.
7. DO NOT TOUCH high voltage leads such as cathode leads to the sputtering power supply unless power is off and a grounding hook has been touched to the parts to be serviced.
8. This equipment contains electrical interlocks to protect personnel from injury. DO NOT DEFEAT, OVERRIDE, OR BYPASS THESE PROTECTIVE DEVICES!! Never leave the keylock in the SERVICE position. This is a *service only* position and bypasses the safety interlock system. Normal operation requires the keylock to be in the AUTO or MANUAL position.
9. DO NOT WORK ALONE!
10. Wear safety glasses.
11. Operators shall not enter areas of the equipment intended for service access only. Only experienced service personnel should enter such areas AFTER taking the various precautions described above.
12. POST HIGH VOLTAGE WARNING SIGNS conspicuously in the operating area.
13. Remove rings, watches, and bracelets before working around high voltage.
14. Observe the following when the Radio Frequency (RF) power option is included:

DANGER

If any of the components relating to the RF power supply, or the matching network, or the internal configuration of the electrodes, or any RF shielding are moved or changed in any way, it may be possible for RF energy to be radiated outside the equipment. RF radiation — even at modest powers — can cause personal injury. Monitor the equipment at frequent intervals with an RF radiation detector to assure any radiation is below acceptable levels for local, state, and federal codes.

SPECIAL AMENDMENT FOR UNITED KINGDOM USERS

ALL ELECTRICAL POWER SOURCES: SAFETY PRECAUTIONS

These systems are all extra-high-voltage systems.

Screens protecting extra-high-voltage conductors should be removed only if appropriate action has been taken to ensure that extra-high-voltage conductors are dead and cannot inadvertently be re-energized.

All machines should be fitted with the special grounding hook provided. This should be used to short out all high-voltage parts and conductors in both the vacuum system and the high-voltage power supply prior to any work. Only authorized personnel should be permitted to carry out work on these systems.

Attention is drawn to the Electricity (Factories Act) Special Regulations (1908 and 1944) — in particular to Regulations 18(d) and 28 of the 1980 Regulations as amended — and to the employer's responsibility to set up suitable systems to safeguard the health and safety of employees under the Health & Safety at Work etc. Act (1974).

HEALTH HAZARD

The condensates deposited on the tank walls of a vacuum system are generally in the form of extremely fine particles. The nature, as well as the form, of the materials pose the following potential health hazards:

a) Inhaling fine particles (powder) may cause damage to the lungs. To help prevent this, wear a protective respirator mask with fine filter that has been approved by the National Institute for Occupational Safety and Health (NIOSH) and the federal Mine Safety and Health Administration (MSHA).

b) Some substances are toxic and inhaling them should be avoided. Take steps to ascertain whether or not the material being deposited is a known toxic substance.

c) Certain powders, titanium for instance, can cause flash fires when exposed to oxygen or other oxidizers. Therefore, when opening the chamber door after a deposition cycle, exercise extreme caution and allow time for the coating surface to oxidize. Breakage of some of the more reactive condensates may still be hazardous even with the above precautions. In this situation, fire-protective clothing should be worn.

SECTION 1

SPECIFICATIONS

1.1 INTRODUCTION

The Temescal CV-14 Models A and B are constant voltage, 14 kilowatt power supplies designed to power and control as many as three electron beam guns. They are compatible with either electromagnetic deflection guns or permanent magnet guns such as those manufactured by Temescal. The power supplies deliver up to 10.2 kV at 1.4A to the gun and also supply emission current regulated filament power. Outputs are provided for longitudinal beam positioning and for longitudinal and lateral beam sweeping. Vacuum system interlock connections are furnished for maximum operator and equipment safety. A filament transformer for each gun is provided for mounting at the vacuum tank(s).

All information in this manual applies to the CV-14 A and B models. In cases where there is a difference between the A and B the information applicable to B only is set off by brackets, e.g. [].

1.2 High Power Distribution

The entire 14kW of the CV-14 A and B may be delivered to one electron beam source or shared between two or three sources operating simultaneously. During simultaneous operation any fluctuation in the operation of one source will not affect the other sources.

The CV-14 A and B are completely wired for three sources. Although they can be purchased with only one source, they are easily modified to accomodate two or three sources by installing plug-in components. The sources can operate simultaneously in one vacuum chamber or independently in as many as three chambers. The wiring in the CV-14 A and B includes all the necessary interlock connections for maximum operator and equipment safety.

The model designation number describes the operating mode for which the supply is intended. See the following chart for an explanation of the model number code.

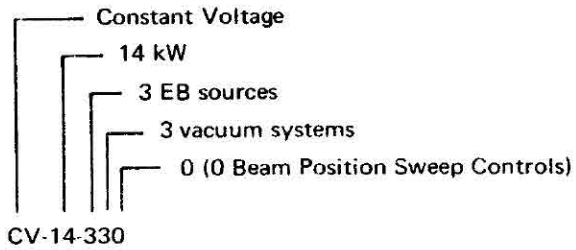

Figure 1-1. Explanation of model number code

Electron beam sources are equipped with electromagnets to position the beam in the longitudinal and lateral axes. By changing the current in either one of the coils, the beam will traverse a straight line. The amplitude of the traverse is determined by the maximum and minimum currents delivered to the electromagnet. If the current is changed in both coils simultaneously, the beam will sweep over the entire evaporant. Properly programmed, this phenomenon aids uniform distribution of the evaporant material on the substrates.

Because the CV-14 A and B sweeps operate with a triangular waveform (figure 1-2), the current in the focusing coil moves from a minimum to a maximum at a constant rate. As a result, the electron beam spends equal periods at all points along its traverse line. If a beam sweep is employed for only one coil, the beam will erode a flat depression in the evaporant. When the beam sweep is activated for both coils, the surface of the evaporant is uniformly eroded.

LATERAL BEAM SWEEP

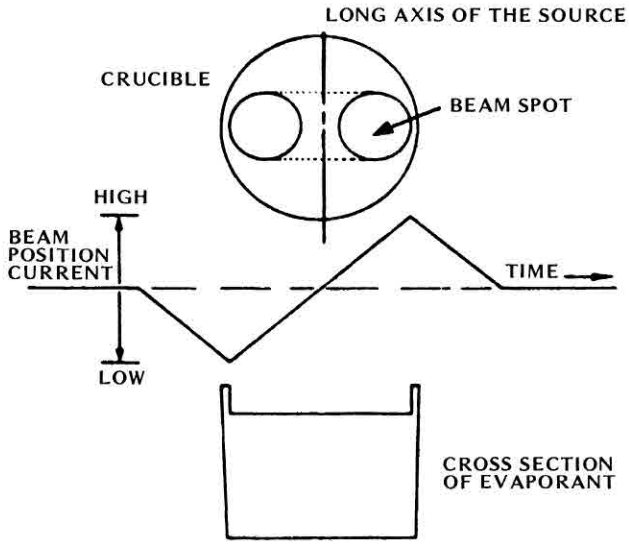

Figure 1-2. Lateral sweep effect

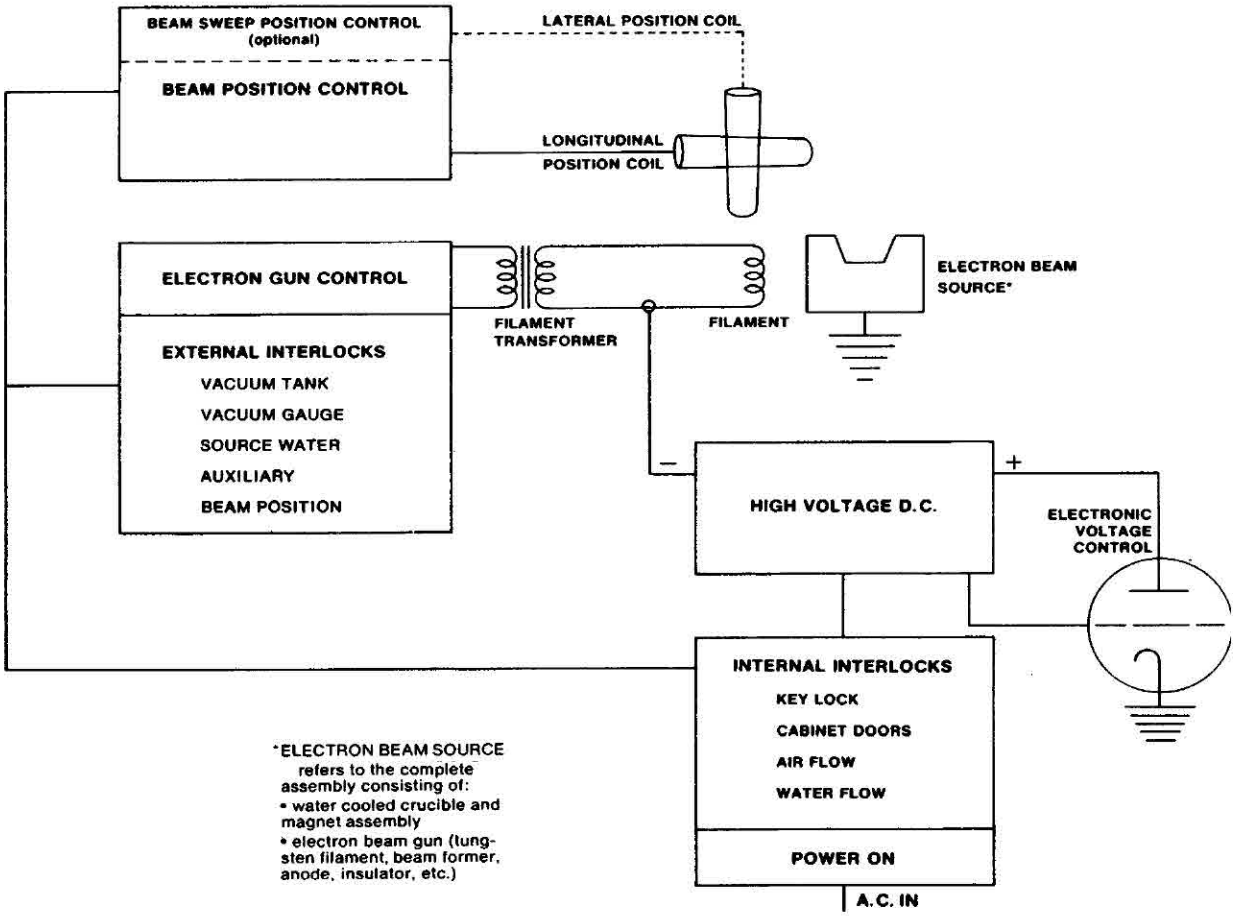

Figure 1-3. Functional block, diagram of the CV-14 (A and B) electron beam power supply, source, and system

1.3 High Voltage Control

The high voltage is fully adjustable from -1 kV to -10.2 kV and is maintained constant within ±2%. Emission is independently regulated within ±2%. The open circuit unregulated voltage of the direct power supply is 12.6 kV. The positive output is connected to ground through a triode tube that acts as a series regulator. The resistance of the triode is varied by the grid control circuits so that the voltage available to the electron beam source is the voltage of the direct current supply (12.6 kV) less the voltage drop across the triode tube. In case of a short circuit or overcurrent condition, all of the power is dissipated by the tube. (See figure 1-3).

CV-14 POWER SUPPLY

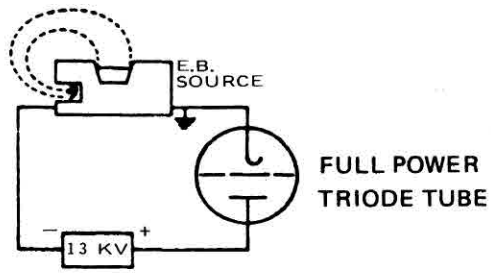

Figure 1-4. Full power triode tube regulation

1.4 Electron Gun Control

Emission current of the electron beam source is determined by the temperature of the tungsten filament. Power for the filament is controlled by a silicon-controlled rectifier (SCR) pair in the electron gun control. Emission current is measured by a transductor that provides a signal for the feedback circuit that controls the firing angle of the SCR's. The feedback circuit maintains emission current level within ±2% of the selected value.

The CV-14 A and B gun controllers can also be operated with an external controller, such as a rate monitor or other device, that produces a signal of ±10V direct current. A rate monitor measures the deposition rate at the substrates. The electron gun control adjusts the emitter filament temperature to maintain a constant rate until the deposition is completed. A thickness

monitor senses when a certain amount of evaporant is deposited and then opens the AUXILIARY interlock, located in the electron gun control, to terminate the deposition and/or to close the shutter.

1.4.1 High Voltage Vacuum Relays

For each electron beam source driven by the CV-14 A and B, there are two high voltage vacuum relays. The first relay, when not energized, grounds the source emitter assembly. The second relay, when energized, conducts high voltage to the source emitter assembly. Thus, during operation the emitter receives high voltage, but when operation stops, the high voltage is not only interrupted, but the emitter itself is also grounded. This assures protection for the operator. If for any reason a high voltage relay should fail, or if a second emitter in the same chamber should arc over to the first one, the gun will not rise to high voltage.

1.5 Beam Position Control (Standard)

Electron beam sources use permanent magnets or electromagnets to position the beam in the crucible. The beam position control provides power for the longitudinal (Y) position electromagnet and for a meter to indicate the current. In addition, the circuit provides adjustable high and low current limits for electromagnetic guns. This feature ensures that the electron beam will be shut off if the magnetic field is too strong or too weak to hold the beam within the crucible. These same current limits prevent the electron beam from being turned on until there is sufficient current flowing in the electromagnet.

1.6 Beam Position Sweep Control (Optional)

The beam position sweep control provides full longitudinal (Y) and lateral (X) positioning for the electron beam. In addition, it varies the positioning currents causing the beam to sweep over the entire area of the evaporant. The amplitude and frequency of sweep are variable and can be selected by the operator.

When evaporating from a pool of molten material, it is not necessary for the beam to sweep the surface; however, certain metals and dielectrics sublime instead of passing through a liquid phase. In this case, if the beam remains in one place very long, it creates a crater in the shape of the beam which deepens and collimates the stream of evaporant, causing non-uniform distribution and minimal bulk evaporation.

1.7 PHYSICAL SPECIFICATIONS

1.7.1 Weight

The total system weight is approximately 900 pounds and will vary depending on the model configuration and options.

1.7.2 Dimensions

a) Power supply module:	28-1/2 inches (724 mm) wide by 39 inches (991 mm) high by 30-1/2 inches (775 mm) deep (including casters)
b) Control module:	28-3/4 inches (730 mm) wide by 27-1/2 inches 699 mm) high by 20 inches (508 mm) deep

1.8 ELECTRICAL SPECIFICATIONS

1.8.1 Input Power

208/220/240V rms [360/380/415V rms], 50/60 hertz, 3 phase, 5 wire system.

NOTE

For 50 hertz operation, be sure to perform step f, paragraph 5.1.1, section 5.

1.8.2 Electrical Outputs

a) Outputs to the electron beam gun:
   1) Gun potential (adjustable): 1 to 10.2 kV direct current (lower limit is determined by cooling water purity)
   2) Gun potential regulation: ±2%
   3) Total beam current (maximum): 1.4A direct current
   4) Beam current regulation: ±2%
   5) Gun filament primary power (maximum, each gun): 120V alternating current, 8A
   6) Gun filament power (maximum, each gun): 12V alternating current, 70A
   7) Magnet current (each gun), adjustable: 0 to 3A direct current into 5Ω load
   8) Magnet sweep current (optional), adjustable: lateral, -3 to +3A direct current into 5Ω; longitudinal, 0 to -3A direct current into 5Ω load, 15 to 100 hertz in ten steps

b) Auxiliary outputs:
   1) 120V alternating current for convenience outlets on control module; 2A (maximum) each outlet
   2) 120V alternating current for customer-supplied, external high voltage warning lights

1.8.3 Control Input

0 to ±10V direct current signal input from the external rate monitor. The polarity may be either positive or negative, depending on internal connections. This signal must be referenced to earth ground.

1.9 CABLES

a) Input power cable: Customer-supplied: must conform to local (National Electrical Code (NEC), and OSHA (Occupational Safety and Health Administration) regulations
b) High voltage cable from power supply to the vacuum system: 20 feet, standard length
c) Control cable from power supply to the vacuum system: 20 feet, standard length
d) Control cable from power supply to the control module: 2 feet, standard length

NOTE

Cable b may be different lengths. Cables c and d may also be various lengths, but the combined length of c and d should not exceed 60 feet. The limiting factor for the length of control cables is the voltage drop in the control and feedback circuits.

1.10 SUPPORT FACILITIES

1.10.1 Cooling Water

a) Flow rate: 3 gpm (11.4 l/m) minimum, filtered
b) Pressure: 50 psig (3.5 kg/cm^2) maximum
c) Inlet temperature: 86°F (30°C) maximum
d) Outlet temperature: 158°F (70°C) maximum
e) Purity-conductance: 200 micromho/cm maximum (as measured with a digital V.O.M., 1.15 megohms, from water jacket to ground.)

1.10.2 Cooling Air

a) Filtered air is drawn into the power supply cabinet by an 8-inch fan located in the rear and exhausted through the top of the cabinet.
b) Input air temperature should be 32° to 104°F (0 to 40°C), free of corrosive fumes and vapors, and have a low dew point. As the dew point rises, condensation forms on the metal jacket of the triode tube. If the condensation is heavy, water will drip onto the tube socket, possibly damaging the regulator circuit of the triode tube.

SECTION 2

INSTALLATION

2.1 GENERAL INFORMATION

The CV-14 A and B power supplies consist of two basic units: the control module and the power supply module. All connections to the vacuum tank are made from the power supply module. The standard cable length is 20 feet for the tank cables and two feet for the control module cables. These cables may be ordered in different lengths to accommodate customer needs.

2.2 MECHANICAL INSTALLATION

2.2.1 Interlock Cable Terminal Strip(s)

Mount the terminal strip of the interlock cable(s) (PG 1151, 1512, 1513,) in a convenient location close to the appropriate vacuum tank. The terminals carry 120V alternating current and should be covered to protect operating personnel.

2.2.2 Power Supply Cooling Water Connections

Make cooling water connections to the 1/2-inch-NPT fittings on the service panel located on the lower rear of the power supply module (figure 2-1).

Do not allow the inlet water pressure to exceed 50 psig. It must be controlled by a regulator or by throttling with a valve. Do not throttle the return line. The correct flow rate is 3 gallons per minute.

In humid climates a solenoid valve should be installed in the inlet water line to prevent the power triode from sweating when the power is off. The power supply cooling water should NOT be connected in series with the gun cooling water.

2.2.3 External Interlock Installation

WARNING

ALL STATEMENTS REGARDING OPERATOR AND EQUIPMENT SAFETY ARE VOID IF THE EXTERNAL INTERLOCKS ARE NOT INSTALLED.

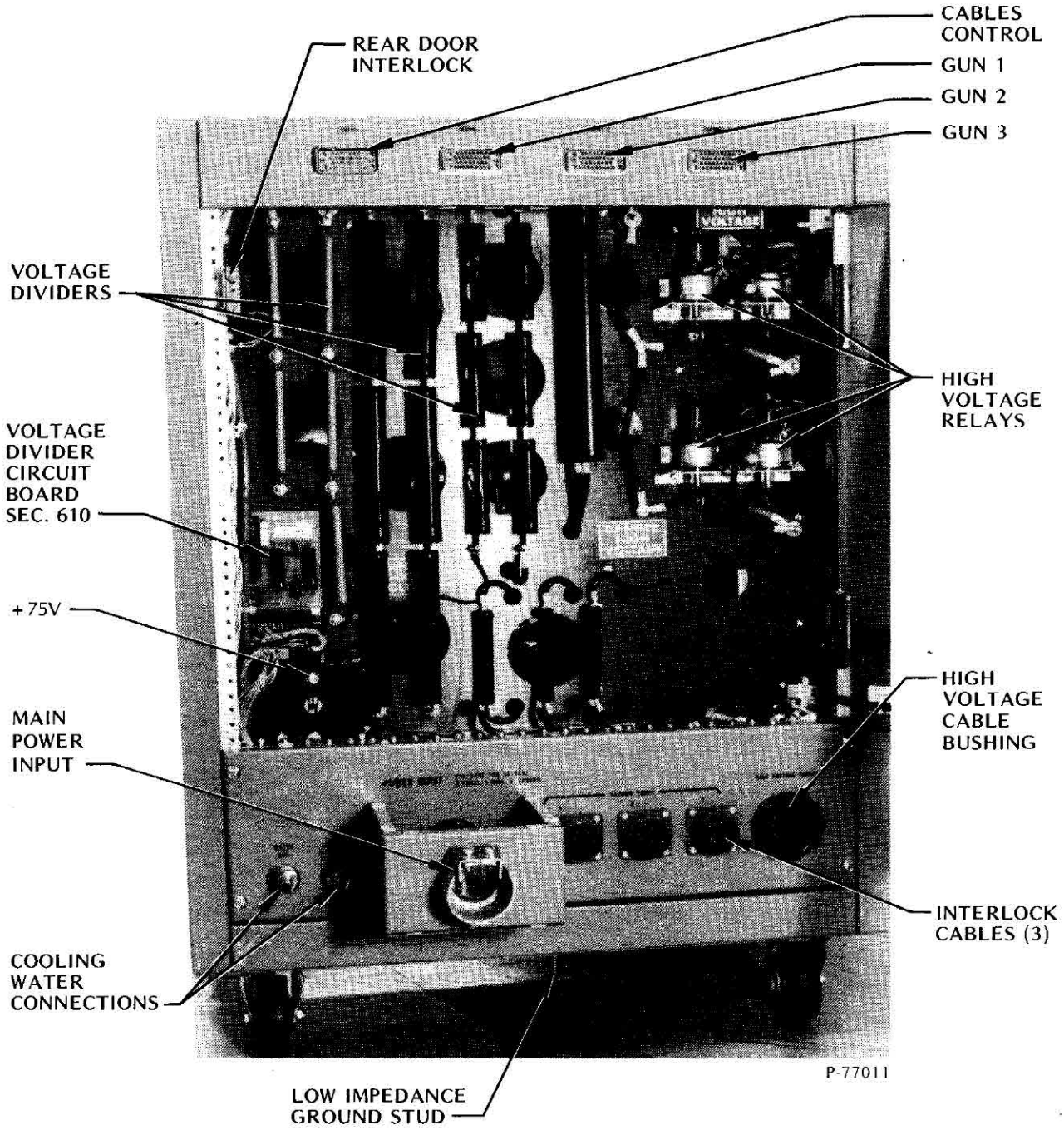

Figure 2-1. CV-14 A and B power supply module rear view showing NPT fittings on the service panel

Figure 2.2 Ground system installation

a. Preferred method

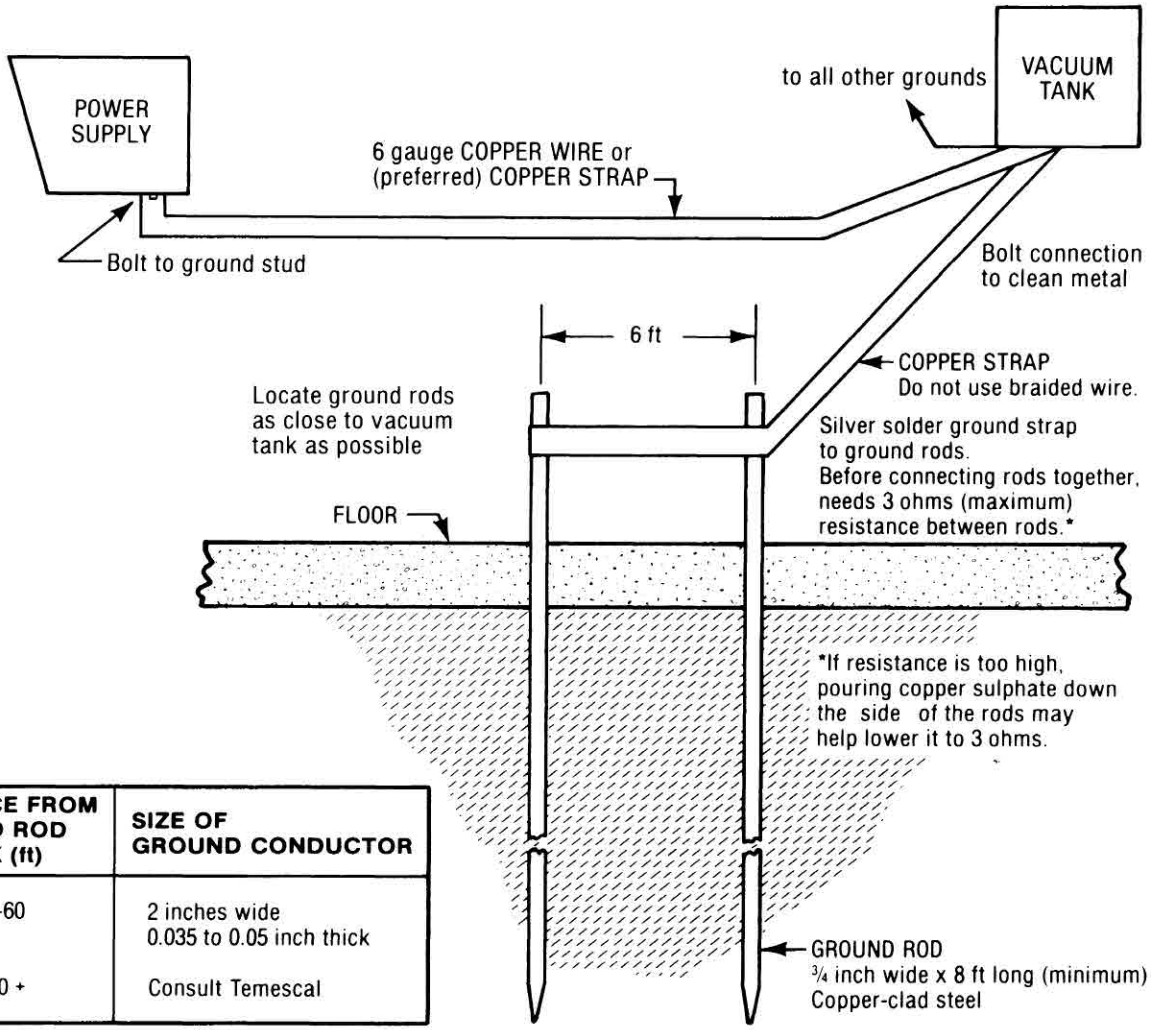

DISTANCE FROM GROUND ROD TO TANK (ft)	SIZE OF GROUND CONDUCTOR
0-60	2 inches wide 0.035 to 0.05 inch thick
60 +	Consult Temescal

b. Alternative method

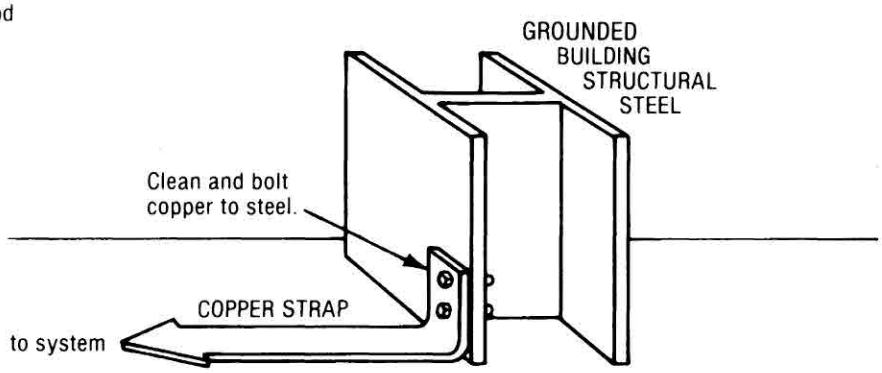

a) Vacuum tank interlock: Install normally-open switches rated at 120V alternating current, 5A, so that they will close when the vacuum chamber is ready for use and open when the vacuum chamber is open. Also install similar switches to deactivate when a high voltage access panel is removed.
b) Ion gauge or vacuum gauge: Make certain there is either a vacuum gauge equipped with an interlock or a vacuum actuated pressure switch for this interlock.
c) Gun water flow interlock: Install a water flow switch in the return line of the electron beam gun water cooling system. This switch should close when the water flow is sufficient to cool the crucible. Refer to the electron beam source instruction manual for complete details.
d) Auxiliary interlock: An auxiliary interlock may be installed if required.

2.3 ELECTRICAL CONNECTIONS (Figures 2-1, 2-2, and 2-3)

2.3.1 System Ground

The ground system is very important for the safe installation of electron beam equipment. The following procedure is recommended to ensure a good ground.

a) Vacuum tank ground:
   1) The vacuum tank should be connected to a good earth ground. Under normal conditions, a good earth ground will consist of two 3/4-inch-diameter by 8-foot copper rods driven through the floor and into the earth near the tank location. Connect the ground rods to the vacuum tank by a 2-inch copper strap, in accordance with the table in figure 2-2. Do not use braided wire. Make the connection to bare, clean tank metal. The rods should be approximately six feet apart. Measure the resistance between the two rods using an accurate resistance bridge. Add salt water or copper sulfate to the earth to lower the resistance to 3 ohms. When this step is completed, bond the two rods together with copper strap.
   2) If the equipment is installed on the upper floors of a building, the system can be grounded by connecting the vacuum tank to the steel structure of the building. This should be done only after ascertaining that the structure has a good earth ground. If it does not, a sufficient number of rods must be driven into the ground and connected to the steel structure to ensure a suitable ground.
   3) Do not rely upon the water pipes for the system ground connection. The multiple joints and associated tape and/or sealing compounds make it

unreliable. The ground must have a low impedance to radio frequency as well as to direct current. Therefore, install the grounding system utilizing established high frequency practices.

b) Filament transformer:

1) The filament transformer supplied as part of the CV-14 A and B should be securely mounted at the vacuum tank as close as is practical to the vacuum tank feedthroughs.

DANGER

The secondary of this transformer carries lethal high voltage and a protective barrier should be installed to prevent accidental contact with these wires.

2) The mounting base of the filament transformer must be connected to tank ground. This can best be done by removing the paint from a small area around the mounting holes in the transformer and from the structure to which it is to be mounted. The connection is then made by the mounting bolts. This ensures that the transformer core and ground shield do not rise above ground potential during operation.

c) Power supply and high voltage shield termination: Under some conditions radio frequency energy is generated within the tank and is transmitted to the power supply through the high voltage and ground cables. It is therefore important that the ground return cable presents a low impedance to radio frequency energy. Inductance, rather than resistance, is the critical parameter. This low impedance ground return should be as short as possible and should not be coiled. Connect one end of the six-gauge ground lead to the same point on the tank as the earth ground is connected. The other end of this cable is connected to the low impedance ground stud at the lower rear of the power supply cabinet. The outer shield of the high voltage cable should also be connected to the tank ground as shown in figure 2-3.

2.3.2 Utility Power

Verify that the voltage on the nameplate corresponds to the available line power. If it does not, refer to paragraph 5.1.1, Voltage Changeover, for the voltage changeover procedure.

Connect the customer-supplied power cable to a service capable of supplying 70 amperes [50 amperes].

2.3.3 Vacuum Tank Electron Beam Gun Wiring

a) Gun filament conductors:
The gun filament conductors from the filament transformer to the vacuum tank feedthroughs should be as short as possible and capable of carrying 70 amperes; 1/4-inch-diameter rod or conductors of equal cross section may be used. The conductors should be insulated for 20 kilovolts or suspended by their ends.

DANGER

Because these wires carry a lethal voltage, install a protective barrier to prevent accidental contact.

The vacuum tank feedthroughs should be rated for a minimum of 70 amperes and 15 kilovolts.

The gun filament conductors from the feedthroughs to the filament terminals on the electron beam source should have the same cross section, but should not be insulated in order to prevent outgassing.

b) Focus coil connections:
All connections between the focus coil terminals on the electron beam gun and the vacuum tank feedthroughs should be made with high temperature insulated 16-gauge (minimum) copper wire. In most installations, glass-jacketed, silicon rubber insulated wire is adequate. These wires should be positioned well away from the filament wires and shielded by a ground plane.

2.3.4 Power Supply to Vacuum Tank Connections for CV-14 A and B (Figs. 2-3 and 2-4)

a) High voltage coaxial cable(s) (one for each gun):
Connect the coaxial cable center conductor to the filament transformer feedthrough. The preferred connection is to the end of the secondary winding connected to the electron gun cathode structure or beam former electrode.

CAUTION

Do not use the center tap of the transformer for the high voltage connection. Damage to the transformer can result.

Connect the outer conductor (shield) to the tank baseplaste (earth ground).

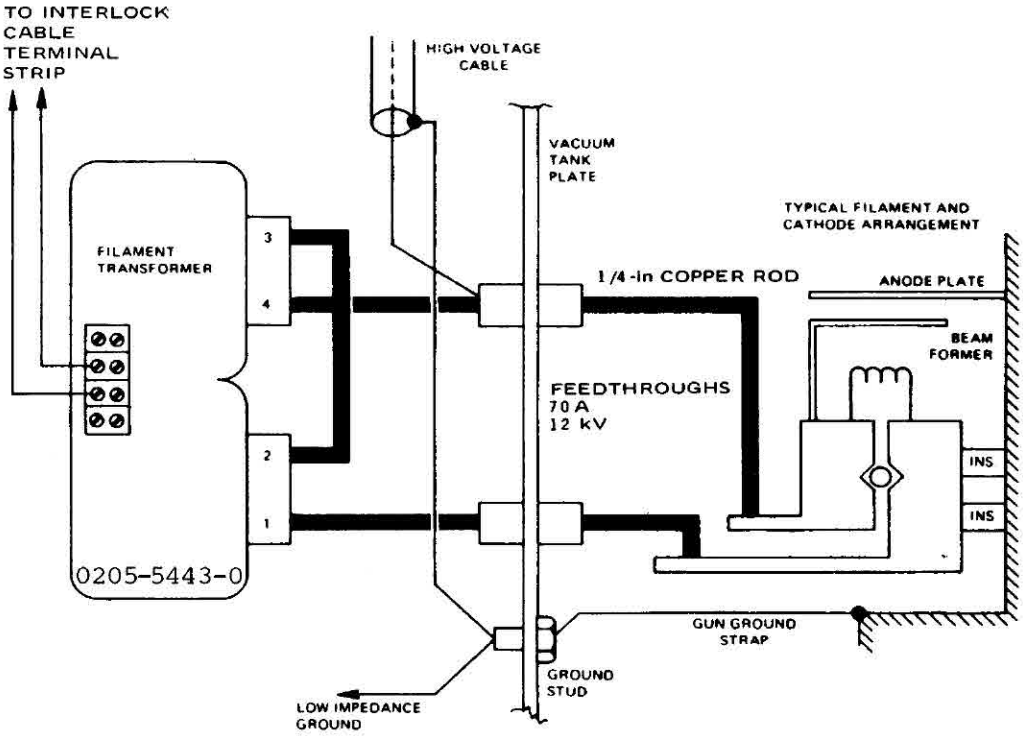

Figure 2-3. Filament transformer connection diagram

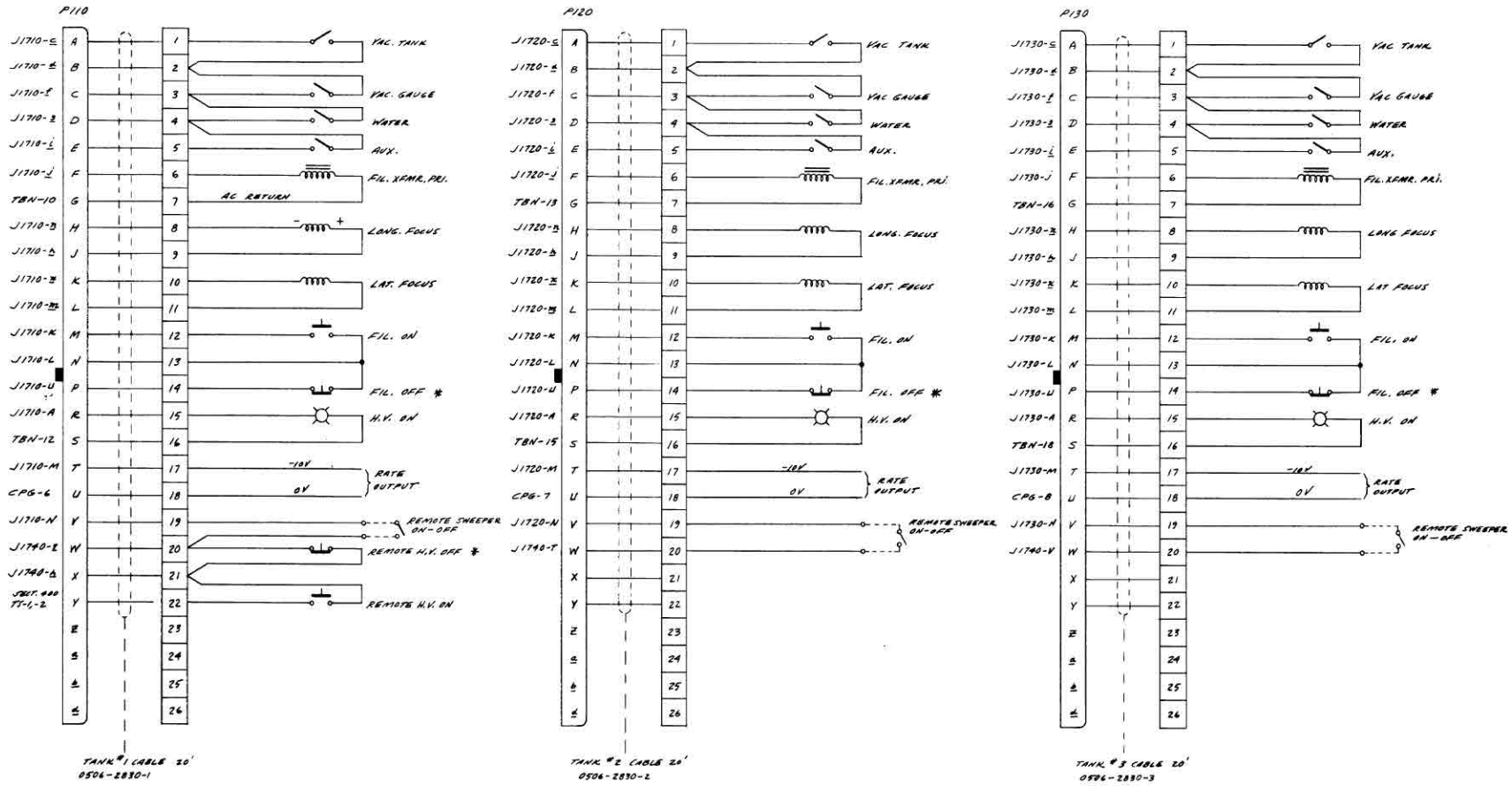

* JUMPER TERMINALS 13 & 14, 20 & 21 WHEN NOT IN USE

Figure 2-4. Tank & interlock connection diagram

ITEM	PART NO.	DESCRIPTION	MAT'L	QTY.

REV.	DESCRIPTION	BY	DATE	APP'D
A	ADDED NOTE	K.R.B.	11-15-76	

DO NOT SCALE DRAWING
UNLESS OTHERWISE SPECIFIED

BERKELEY AIRCO Temescal CALIFORNIA
A DIVISION OF AIR REDUCTION COMPANY, INCORPORATED

DRAWN BY F. BURGETT DATE 3/18/76 CHK BY APP BY SCALE

CV-14 POWER SUPPLY
TANK & INTERLOCK CONNECTION DIAGRAM.

12-9-76

506-3884 A

Route the high voltage cable through the 3-inch bushing at the lower rear of the power supply module and connect the center conductor to the appropriate terminal on the high voltage rectifier panel, section 600. Use terminal E11 for gun No. 1, E12 for gun No. 2, and E13 for gun No. 3.

Connect the outer conductor (shield) to any convenient terminal on the ground terminal strip (TSN).

b) Interlock cables (PG 110, 120, and 130):
The interlock cables (one for each gun) provide interlock protection, filament power, focus power, and auxiliary input and output terminations.

WARNING
ALL STATEMENTS REGARDING OPERATOR AND EQUIPMENT SAFETY ARE VOID IF THE EXTERNAL INTERLOCKS ARE BYPASSED.

Connect the appropriate cable to J110 (gun No. 1), J120 (gun No. 2), or J130 (gun No. 3) on the service panel at the lower rear of the power supply module. The terminal strip on the vacuum tank end (figure 2-4) is connected as follows:

1) Connect all access panel microswitches, hoist limit switches, or access door microswitches in series and conntect between terminals 1 and 2.
2) Connect the ion gauge or vacuum gauge interlock between terminals 2 and 3.
3) Connect the normally-open contacts of the gun water flow switch between terminals 3 and 4.

NOTE
The auxiliary interlock may be used with a thickness monitor, water temperature switch, or any other auxiliary equipment desired. If no auxiliary interlock is required, jumper terminals 4 and 5.

c) Connect terminal 6 to the filament transformer primary. Use 16-gauge wire. Connect the other side of the primary winding to terminal 7.
d) Terminals 8 and 9 are for the longitudinal (Y) focus current. Connect the minus (-) side of the focus coil to terminal 8 and the plus (+) side to terminal 9.
e) Terminals 10 and 11 are for the (optional) lateral sweep current. Connect these terminals to the lateral coil. Polarity is not important. Do NOT ground either one of these terminals.
f) No connection to terminal 12. Jumper terminals 13 and 14. If a remote filament ON-OFF switch is desired, connect a normally-open momentary-closed switch to

terminals 12 and 13. Connect a normally-closed, momentary-open switch to terminals 13 and 14.

g) Terminals 15 and 16 provide 120V alternating current when high voltage is applied to the gun. A connection to a warning light can be made if desired.

h) Terminals 17 and 18 are for the rate monitor control signal: 0 to ±10V.

i) Terminals 19 and 20 are for a remote switch to turn the sweeper ON and OFF. When the switch is closed the sweeper is OFF.

j) Terminals 20 and 21 should be jumpered. However, if a remote high voltage off is desired, connect a normally-closed momentary-open switch on terminals 20 and 21 instead.

k) Terminals 21 and 22 are usually not connected. However, if a remote high voltage on is desired, a normally-open momentary-closed switch should be used on terminals 21 and 22.

2.3.5 Rate Monitor Input (CV-14 A and B)

Connect the rate monitor.

WARNING

REFER TO THE RATE MONITOR MANUAL TO DETERMINE IF THE OUTPUT IS POSITIVE OR NEGATIVE.

Remove the transductor amplifier printed circuit board from the electron gun control and check the jumper located on the gun control printed circuit board. If the rate monitor output is positive, the jumper should be between holes 1 and 3; if negative, between 1 and 2. If the jumper is not in the proper location, remove the gun control printed circuit board and connect the jumper as required. Replace both boards in their sockets. Connect the rate monitor signal output to terminals 17 and 18 of the interlock terminal strip.

2.3.6 Power Supply to Vacuum Tank Connections (Original CV-14) Figs. 2-5 and 2-6

a) High voltage coaxial cable(s) one for each gun): Connect the coaxial cable center conductor to the filament transformer feedthrough. The preferred connection is to the end of the secondary winding which is connected to the electron gun cathode structure or beam former electrode.

CAUTION

Do not use the center tap of the transformer for the high voltage connection. Damage to the transformer may result.

Connect the outer conductor (shield) to the tank baseplate (earth ground).

Route the high voltage cable through the 3-inch bushing at the lower rear of the power supply module and connect the center conductor to the appropriate terminal on the high voltage rectifier panel, section 600. Use terminal E11 for gun No. 1, E12 for gun No. 2, and E13 for gun No. 3.

Connect the outer conductor (shield) to any convenient terminal on the ground terminal strip (TSN).

b) Interlock cables (PG 100, 120, 130): The interlock cables (one for each gun) provide interlock protection, filament power, focus power, and auxiliary input and output terminations.

WARNING
ALL STATEMENTS REGARDING OPERATOR AND EQUIPMENT SAFETY ARE VOID IF THE EXTERNAL INTERLOCKS ARE BYPASSED.

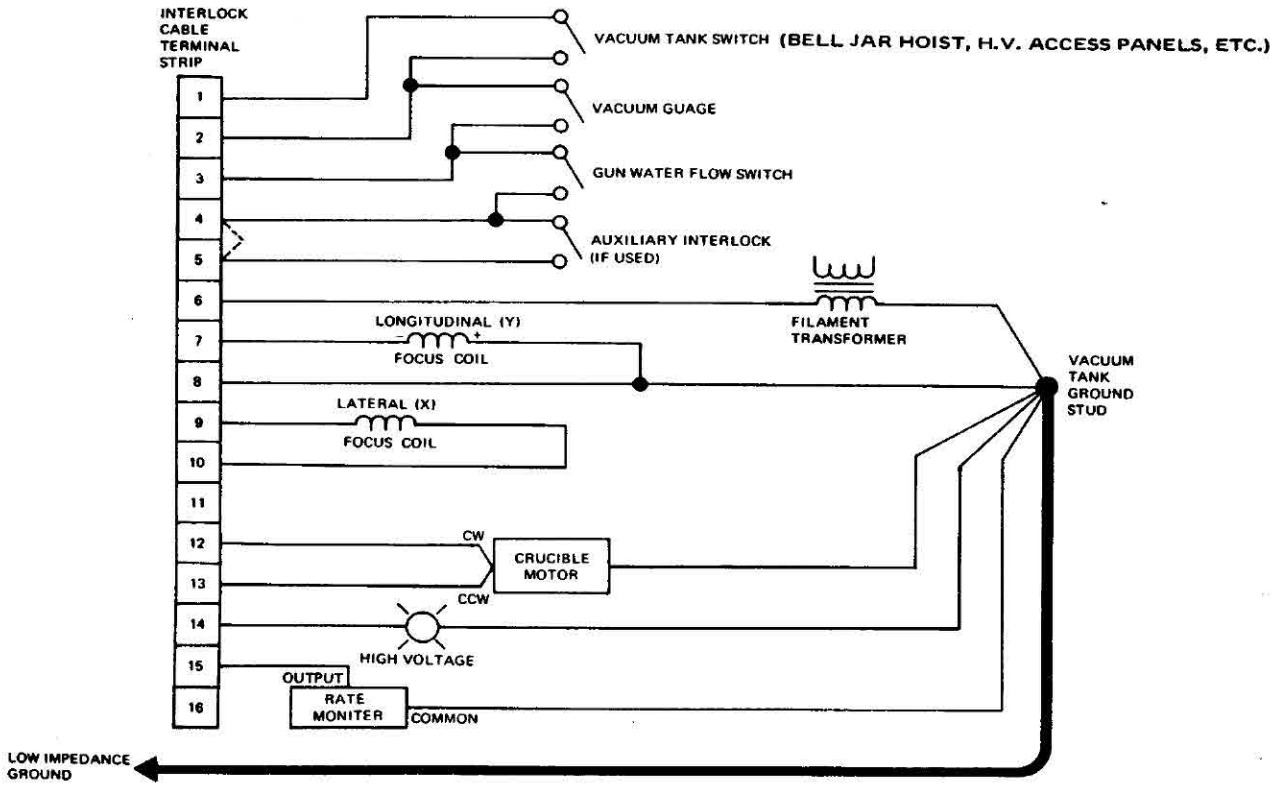

Figure 2-5. Interlock terminal strip connection diagram

Connect the appropriate cable to J110 (gun No. 1), J120 (gun No. 2), or J130 (gun No. 3) on the service panel at the lower rear of the power supply module. The terminal strip on the vacuum tank end (fig. 2-4) is connected as follows:

1) Connect all access panel microswitches, hoist limit switches, or access door microswitches in series and connect between terminals 1 and 2.

2) Connect the ion gauge or vacuum gauge interlock between terminals 2 and 3.

3) Connect the normally-open contacts of the gun water flow switch between terminals 3 and 4.

NOTE

The auxiliary interlock may be used with a thickness monitor, water temperature switch, or any other auxiliary equipment desired. If no auxiliary interlock is required, jumper terminals 4 and 5.

c) Connect terminal 6 to the filament transformer primary. Use 16-gauge wire. Connect the other side of the primary winding to tank (earth) ground.
d) Terminals 7 and 8 are for the longitudinal (Y) focus current. Connect the minus (-) side of the focus coil to terminal 7 and the plus (+) side to terminal 8. Also connect terminal 8 to tank (earth) ground.
e) Terminals 9 and 10 are for the (optional) lateral sweep current. Connect these terminals to the lateral coil. Polarity is not important. Do NOT ground either one of these terminals.
f) No connection is made to terminal 11.
g) Terminals 12 and 13 provide 120V ac to a crucible motor (if used). Terminal 12 provides power when the motor control switch on the circuit breaker panel is placed in the clockwise (CW) position and terminal 13 provides power in the counterclockwise (CCW) position. The motor return should be connected to tank (earth) ground. Motor capacitors may have to be installed. Careful attention should be given to the motor connection so that the directions of motor rotation corresponds to the position of the front panel switch.
h) Terminal 14 provides 120V ac when high voltage is applied to the gun. It may be connected to a warning light if desired.

i) Terminal 15 is used for the rate monitor signal connnection.
j) No connection is made to terminal 16.

2.3.7 Rate Monitor Input (Original CV-14)
Connect the rate monitor common to tank (earth) ground.

WARNING
REFER TO THE RATE MONITOR MANUAL TO BE SURE THAT THE COMMON CAN BE GROUNDED WITHOUT DAMAGE TO THE INSTRUMENT. ALSO DETERMINE IF THE OUTPUT IS POSITIVE OR NEGATIVE.

Remove the transductor amplifier printed circuit board from the electron gun control and check the jumper located on the gun control printed circuit board. If the rate monitor output is positive, the jumper should be between holes 1 and 3; if negative, between 1 and 2. If the jumper is not in the proper location, remove the gun control printed circuit board and connect the jumper as required. Replace both boards in their sockets. Connect the rate monitor signal output to terminal 15 of the interlock terminal strip.

2.3.8 Interconnecting Cables (All CV-14 models)
Install the cables between the power supply module and the control module. There is one cable for each gun and one control cable for as many as three guns. Therefore, if a one-gun system is ordered, two cables are supplied; if two guns, three cables, etc. These cables are keyed for installation in the correct jack.

2.3.9 Solenoid Valve--Tube Cooling Water (All CV-14 models)
Connect the solenoid valve (if used) to one of the convenience outlets located on the rear of the control module.

2.3.10 Grounding Hooks (All CV-14 models)
Grounding hooks should be provided at each vacuum tank.

IMPORTANT
Refer to section 3, Controls and Operation, for initial turn-on instructions.

SECTION 3

CONTROLS AND OPERATION

3.1 FRONT PANEL CONTROLS AND INDICATORS (Figure 3-1)

3.1.1 Power Supply Module

MAIN POWER SUPPLY CIRCUIT BREAKER: Resettable, 70A [50A] circuit breaker for main power protection. It is also used as a master ON/OFF control.

3.1.2 Control Module

a) High Voltage Control Panel: (Figure 3-2)

1) POWER ON indicator (LT1): Lights when power is applied to the power supply through the main power supply circuit breaker.
2) TRIODE WATER indicator (LT2): Lights if sufficient water is flowing in the power triode cooling water lines.
3) DOORS indicator (LT3): Lights if the power supply module side panels and rear access door are closed.
4) AIR indicator (LT4): Lights if a sufficient amount of air flow exists in the power triode filament cooling circuit.
5) PC CARDS & KEYLOCK indicator (LT5): Lights if all the power supply module printed circuit boards are correctly installed and if the keylock switch is turned ON.
6) KEYLOCK (SW3): A key-operated switch which enables the high voltage control circuits.
7) HV ON (SW1): A red, momentary contact pushbutton switch that applies power to the high voltage power supply contactors and latching circuits. An internal lamp is illuminated when the switch is closed and remains lighted as long as power is applied to the high voltage power supply.
8) HV OFF (SW2): A white, momentary action pushbutton switch which opens the high voltage latching circuit and causes input power to be removed from the high voltage power supply. An internal lamp is illuminated when the high voltage is off and all high voltage control interlocks are closed. This functions as a ready indicator.
9) HIGH VOLTAGE METER (ME1): Indicates the voltage available for the electron beam guns (15 kV full scale).

Figure 3-1. CV-14 A and B Power supply and control module

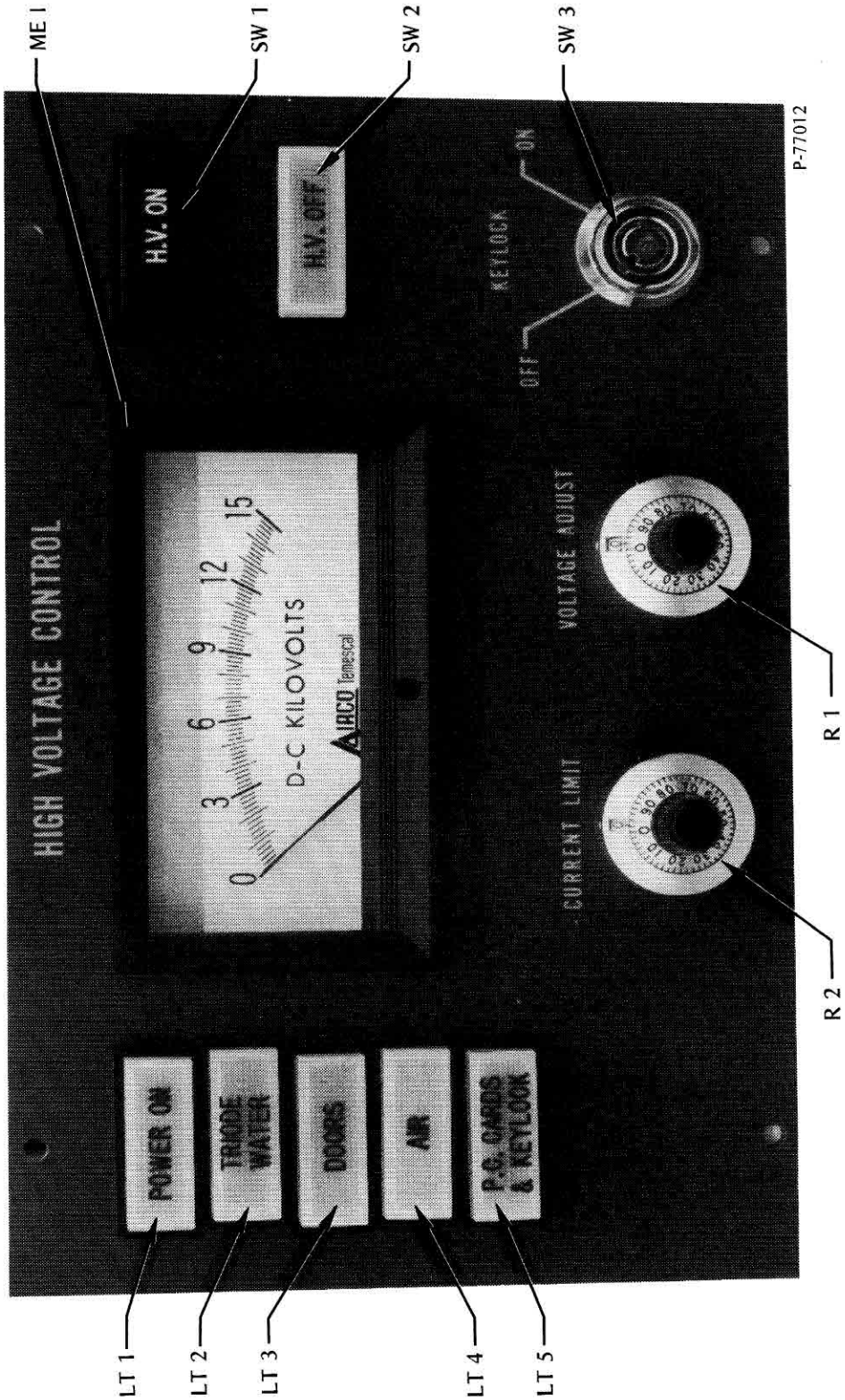

Figure 3-2. CV-14 A and B high voltage control panel

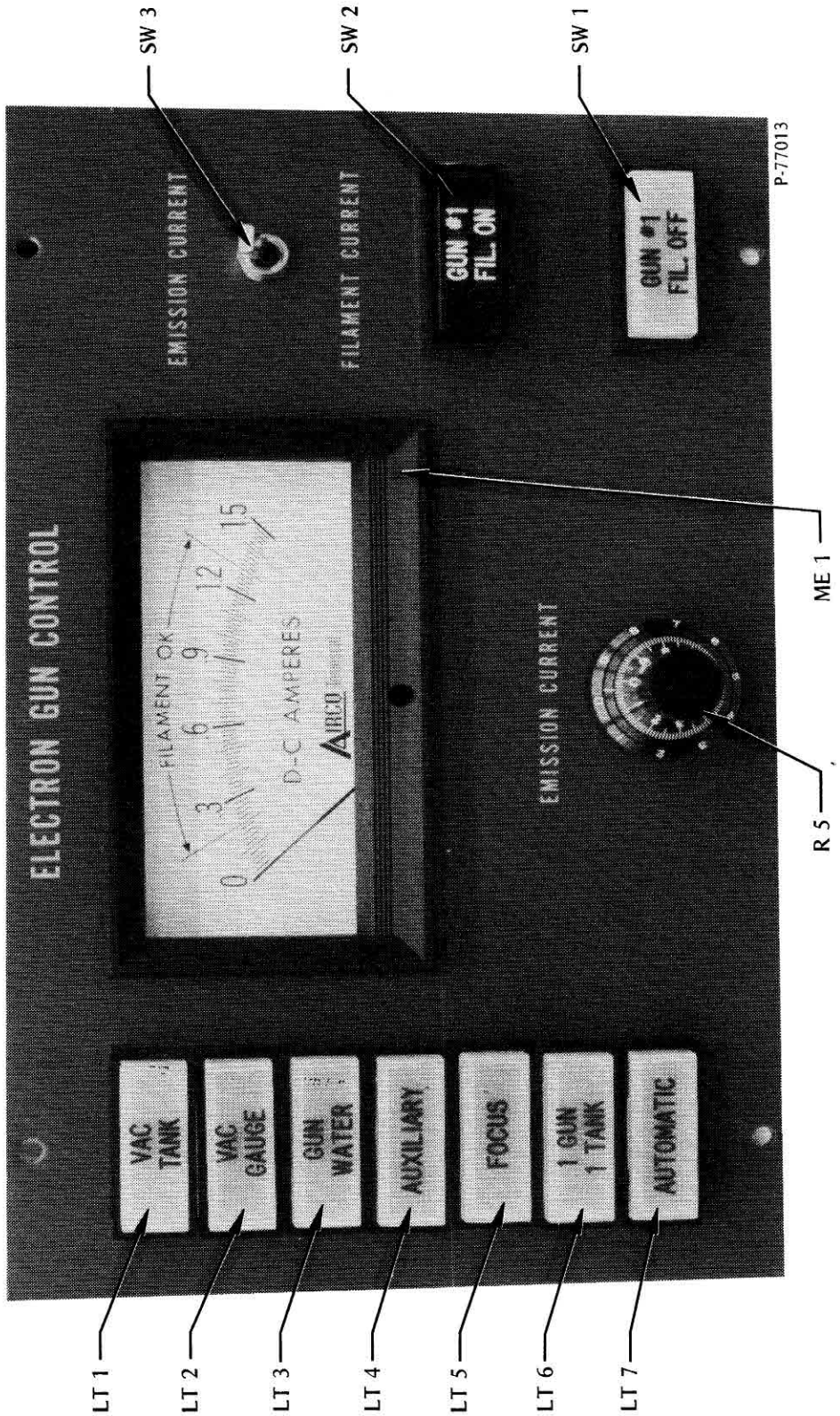

Figure 3-3. CV-14 A and B electron beam gun control panel

10) VOLTAGE ADJUST (R1): Clockwise rotation increases the high voltage. Nominal operating range is from 1.2 to 10.2 kilovolts.
11) CURRENT LIMIT (R2): Clockwise rotation increases the maximum total emission current available from the power supply. The nominal operating range is from 0.4 to 1.4 amperes. While operating, this control should be turned fully clockwise, maintaining a constant voltage up to the rated 1.4A output.

b) Electron Gun Control (figure 3-3):
1) VAC TANK indicator (LT1): Lights if the customer-installed switch on the vacuum tank is closed.
2) VAC GAUGE indicator (LT2): Lights if the customer-supplied vacuum gauge switch is closed.
3) GUN WATER indicator (LT3): Lights if the customer-supplied water flow switch in the gun cooling water line is closed.
4) AUXILIARY indicator (LT4): Lights if the customer-supplied auxiliary interlock is closed.
5) FOCUS indicator (LT5): Lights if the longitudinal focus current is within the desired limits. This light will illuminate automatically if a permanent magnet source is used.
6) MODE INDICATOR LIGHT (LT6): This light shows the operating mode.
7) AUTOMATIC Indicator (LT7): Has no function.
8) FILAMENT ON (SW2): A red, momentary contact push-button switch that supplies power to the filament; closes the high voltage relays that unground and provide high voltage to the electron beam gun; and applies power to the filament control latching circuits. An internal lamp is illuminated when the switch is closed and remains lighted as long as power is applied to the filament and the high voltage realys.
9) FILAMENT OFF(SW1): A white, momentary action pushbutton switch that opens the filament control latching circuits and removes power from the gun filament and the high voltage relays. An internal lamp is illuminated when the filament power is off and all the filament control interlocks are closed. This light functions as a ready indicator.
10) METER SWITCH (SW3): A spring-return toggle switch that transfers the electron gun control front panel meter from indicating emission current to indicating relative filament current.
11) ELECTRON GUN CONTROL METER (ME1): This meter indicates the gun emission current (1.5 amperes full scale) or relative filament current.

12) EMISSION CURRENT (R5): Clockwise rotation increases the emission current. The nominal operating range is from 0 to 1.4 amperes.

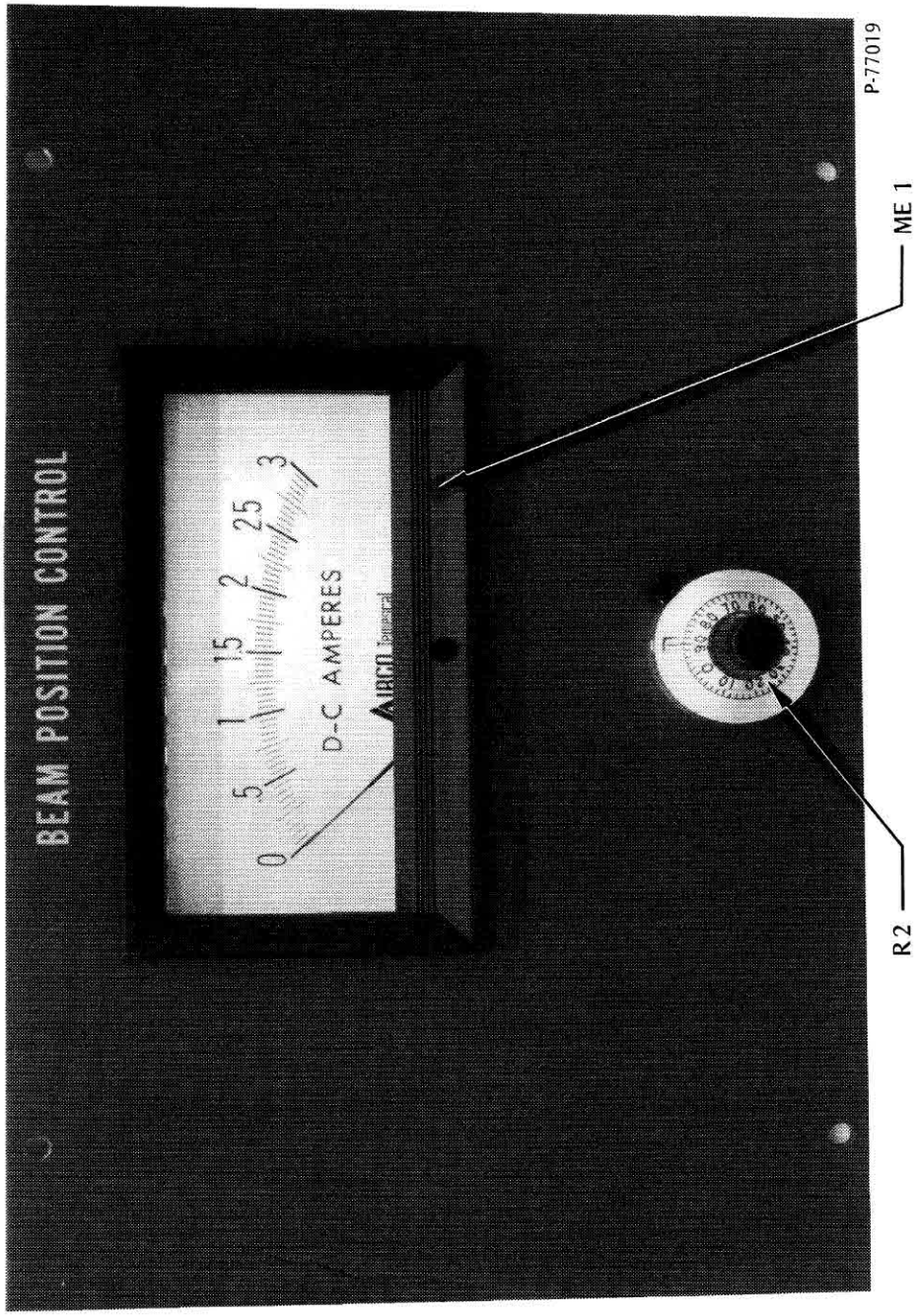

Figure 3-4. CV-14 A and B beam position control panel

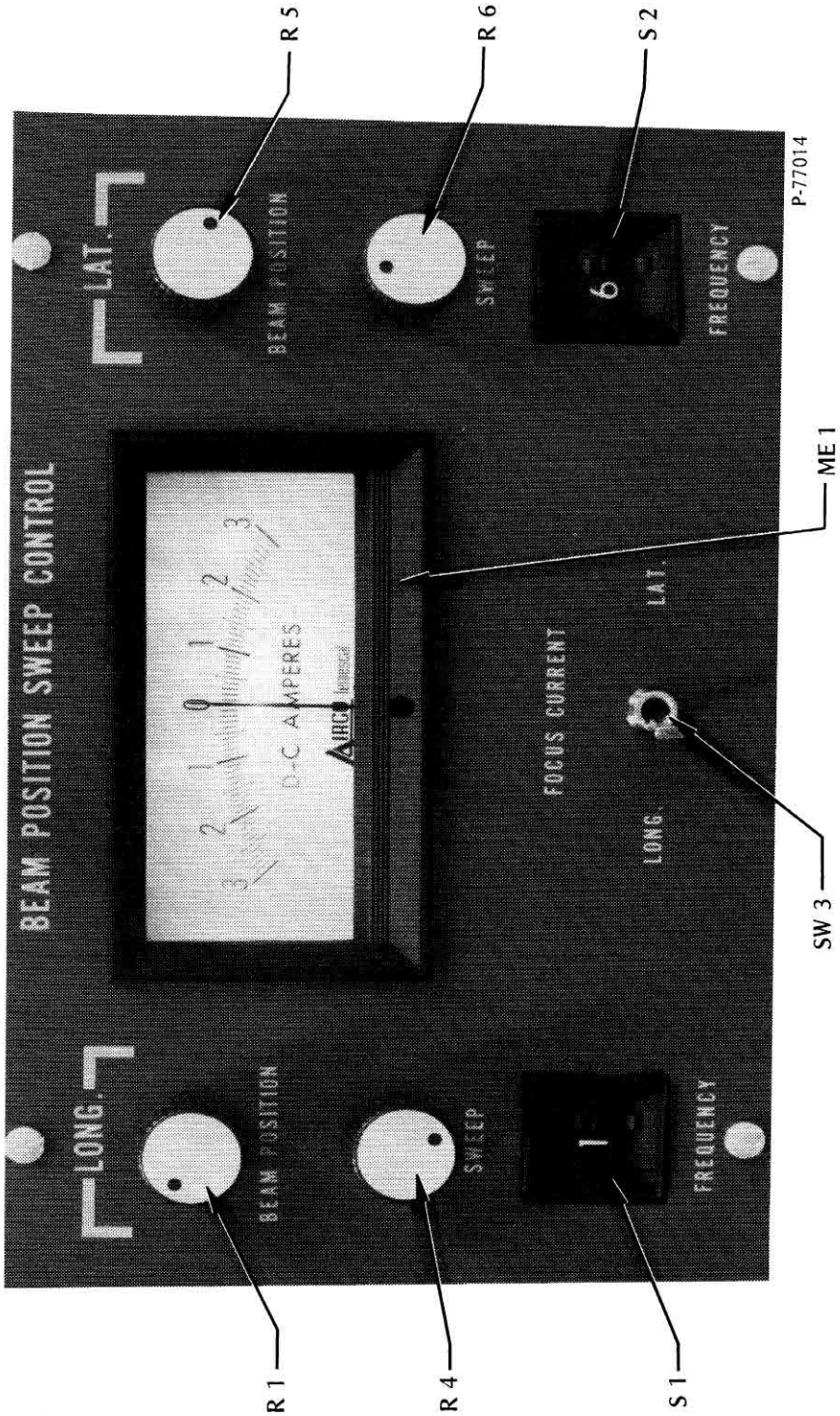

Figure 3-5. CV-14 A and B beam position sweep control panel

c) Beam Position Control (figure 3-4):
   1) BEAM POSITION CONTROL (R2): Clockwise rotation increases the focus current that moves the beam closer to the filament. This control moves the beam on an axis tnrough the gun filament center-line (longitudinal or Y-axis).
   2) FOCUS CURRENT METER (ME1): Indicates the current through the longitudinal focus coil (3 amperes full scale).
d) Beam Position Sweep Control (Optional)(figure 3-5):
   1) LONGitudinal BEAM POSITION (R1): Clockwise rotation increases the average longitudinal focus current.
   2) LONGitudinal SWEEP (R4): Clockwise rotation increases the longitudinal sweep amplitude.
   3) LONGitudinal FREQUENCY (S1): A ten-position thumbwheel switch that increases the frequency as the number setting is increased. The nominal range is 15 to 100 hertz in ten steps. Zero is the maximum frequency.
   4) LATeral BEAM POSITION (R5): Adjusts the beam position in the lateral (X) direction by changing the average lateral focus current.
   5) LATeral SWEEP(E6): Clockwise rotation increases the lateral sweep amplitude.
   6) LATeral FREQUENCY (S2): A ten-position thumbwheel switch. The frequency increases as the number setting is increased. The nominal range is 15 to 100 hertz in ten steps. Zero is the maximum frequency.
   7) FOCUS CURRENT meter switch (S3): A toggle switch to select either longitudinal or lateral current reading on the FOCUS CURRENT meter.
   8) FOCUS CURRENT METER (ME1): This meter indicates either longitudinal or lateral average focus current (3-0-3 amperes).
e) Circuit Breaker Panel: These controls are located behind the hinged door next to the high voltage control panel. (Figure 3-6).
   1) MODE selector (SW1): A key-operated switch to select the desired operating mode. This control switches in or bypasses various external interlocks as required.
   2) LOCAL/REMOTE switches: Three toggle switches (one for each gun) that select the desired emission control mode. The local position connects the EMISSION CURRENT control to the electron gun control circuitry: the REMOTE position connects the external input (usually from a customer-supplied rate monitor) to the gun control circuits.

3) CIRCUIT BREAKERS: Twenty-five pushbutton resettable circuit brakers that provide protection for various circuits in the power supply. These circuit breakers are an indicating type; a reset button protrudes about 1/2-inch out of the case when tripped. To reset, push the tripped indicator button back to its normal position.

Circuit Breaker	Amperes	Function
CB1	15	Main power
CB2	8	High voltage relay transductor and auxiliary
CB3	10	Regualtor Tube Filament and Fan Power
CB4	5	Bias Power
CB5	5	Control
CB6	8	Electron Gun Control No. 1
CB7	8	Electron Gun Control No. 1
CB8	8	Electron Gun Control No. 2
CB9	8	Electron Gun Control No. 2
CB10	8	Electron Gun Control No. 3
CB11	8	Electron Gun Control No. 3
CB12	3	Longitudinal Focus Gun No. 1
CB13	3	Longitudinal Focus Gun No. 2
CB14	3	Longitudinal Focus Gun No. 3
CB15	5	Lateral Focus Gun No. 1
CB16	3	Lateral Focus Gun No. 1A
CB17	3	Lateral Focus Gun No. 1B
CB18	5	Lateral Focus Gun No. 2
CB19	3	Lateral Focus Gun No. 2A
CB20	3	Lateral Focus Gun No. 2B
CB21	5	Lateral Focus Gun No. 3
CB22	3	Lateral Focus Gun No. 3A
CB23	3	Lateral Focus Gun No. 3B
CB24	4	Spare
CB25	4	Spare

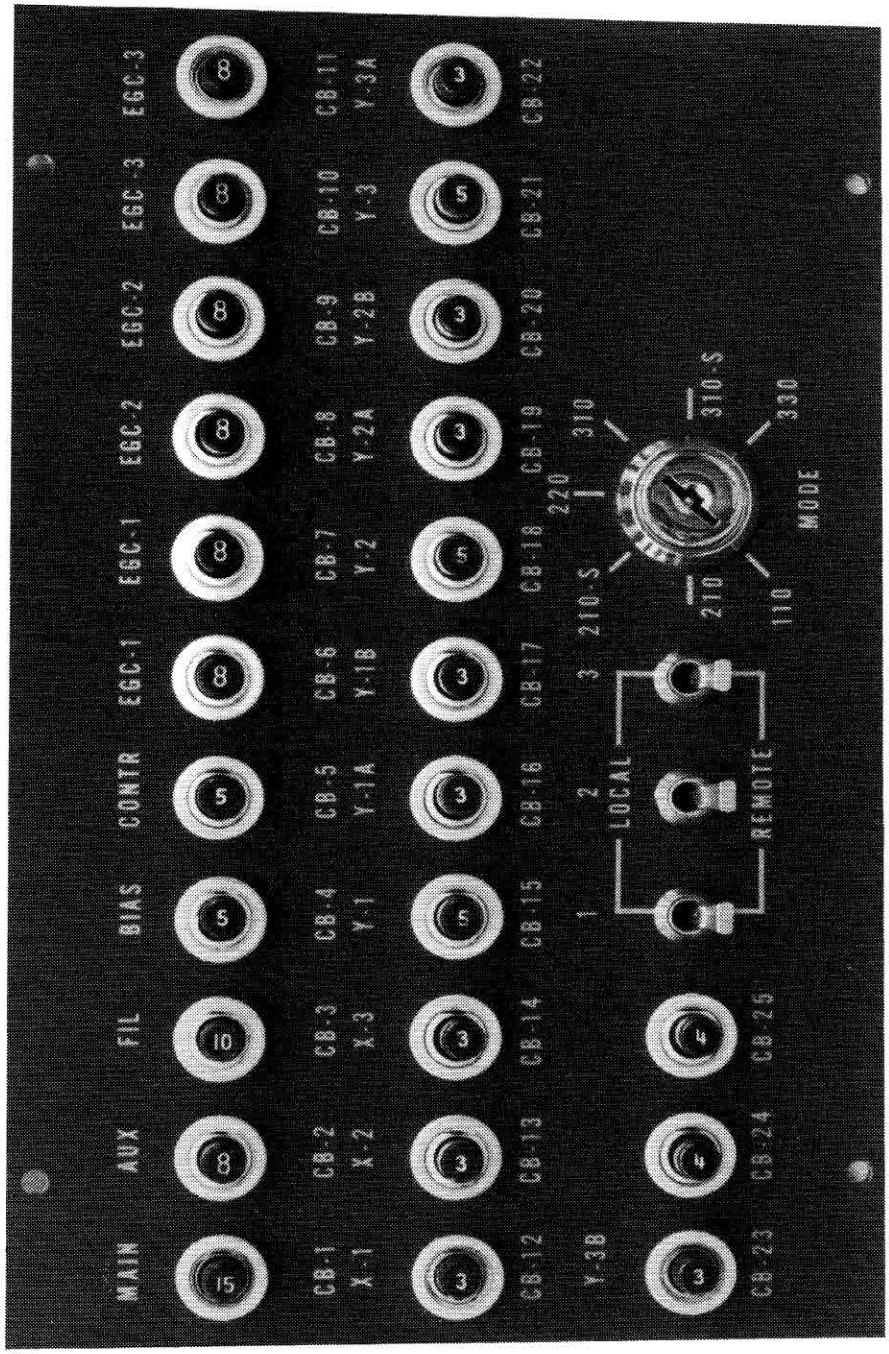

P-77021

Figure 3-6. CV-14 A and B circuit breaker panel

3.1.3 Auxiliary Controls

a) SILICON CONTROLLER RECTIFIER BIAS control: A ten-turn trimmer potentiometer that is accessible through the lower access port on the back of the electron gun control unit. It is located closest to the center of the electron gun control unit (figure 3.7) and sets the minimum filament current.

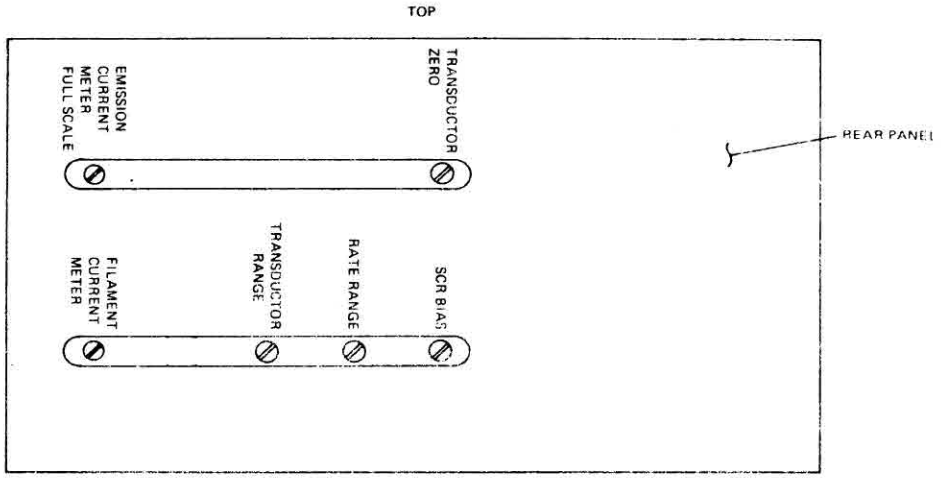

Figure 3-7. Electron gun control service adjustment location

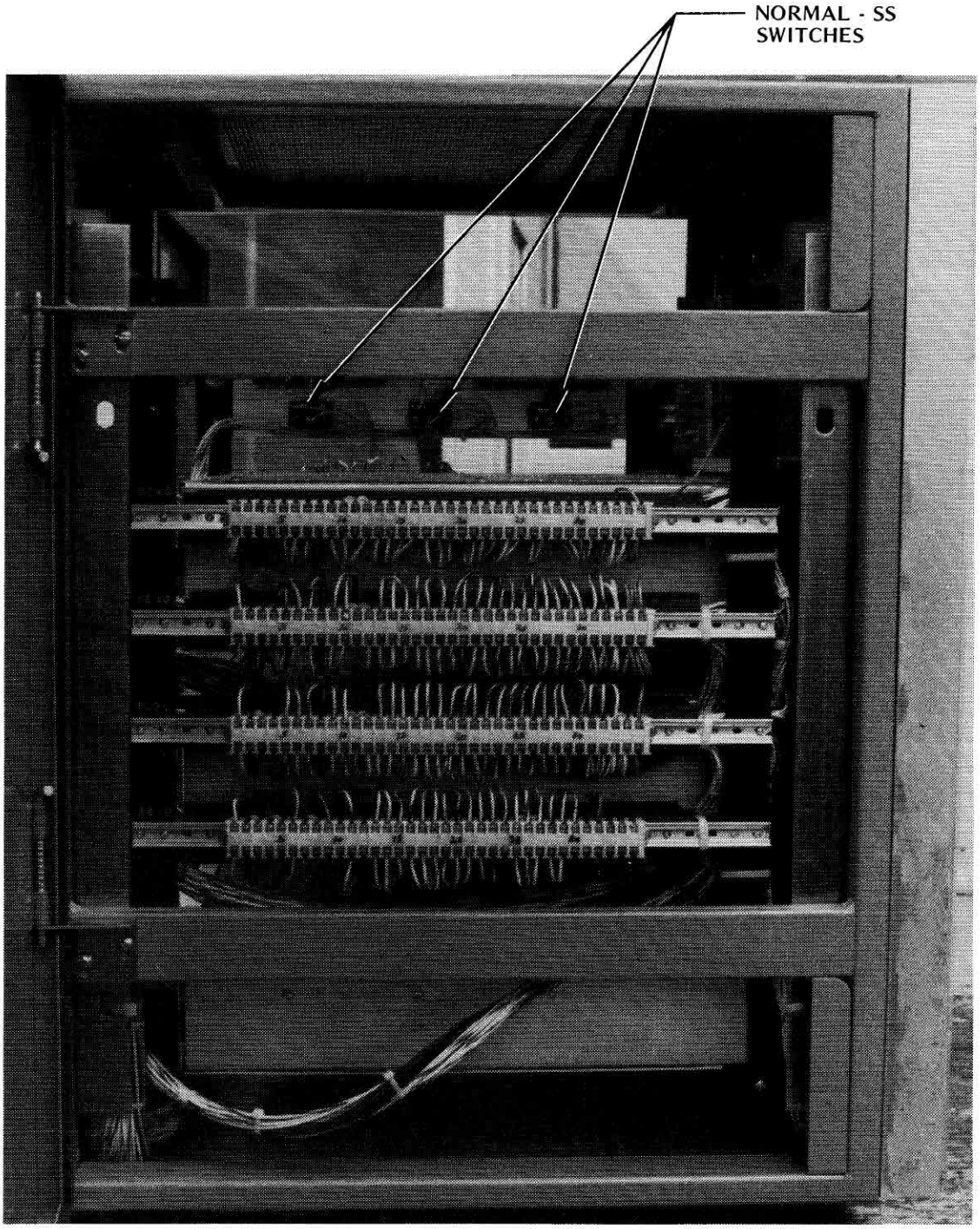

P-77015

Figure 3-8. CV-14 A and B electron gun control, side view showing normal SS switches

b) RATE RANGE control: A ten-turn trimmer potentiometer located next to the SCR BIAS control. This control adjusts the maximum rate monitor input signal level.
c) NORMAL-SS switches (figure 3-8): Three toggle switches (one for each gun) located above the top terminal strip on the right side of the control module. These switches select either electromagnetic focus operation of the beam position control (NORMAL) or permanent magnet focus (SS).
d) POSITION-SWEEP switch (figure 5-5): This switch is located in the (optional) beam position sweep control on the printed circuit board socket panel. It provides for longitudinal beam position control with no sweep in the UP position or full sweep control in the DOWN position.
e) POWER SUPPLY MODULE CIRCUIT BREAKERS: Two resettable circuit breakers located behind the front panel of the power supply module below and to the right of the main power supply circuit breaker. The 60 ampere unit provides overload protection for the high voltage circuits. The 5 ampere unit provides overload protection for the longitudinal beam position and electron gun control power supplies.

3.2 INITIAL OPERATION

3.2.1 Preliminary Precautions

Before turning on the power supply for the first time, make sure that:

a) The low impedance ground is correctly installed.
b) The external interlocks are installed. Proper operation of the interlocks will be determined in later steps.
c) The electron beam gun(s) is correctly installed and has evaporant material in its crucible.

CAUTION

Read the entire section on operation to become familiar with the controls and operating procedures before turning on the power supply.

3.2.2 Preliminary Control Settings

a) Power supply main circuit braker: OFF
b) KEYLOCK: OFF
c) VOLTAGE ADJUST: Fully counterclockwise
d) CURRENT LIMIT: Fully counterclockwise
e) EMISSION CURRENT control(s): Fully counterclockwise
f) BEAM POSITION control(s): Mid-range
g) SWEEP control(s), if used: Fully counterclockwise
h) POSITION-SWEEP switch, if used: to desired operating mode.

MODE switch: Select the desired mode. The first number refers to the number of guns used, and the second number refers to the number of vacuum tanks. For example, 210 is a two-gun, one-tank operating mode.

j) Circuit breakers: Check that no circuit breakers have tripped during shipment. They should all be IN.
k) LOCAL/REMOTE switches: LOCAL
l) NORMAL-SS switches (for each gun): NORMAL for electromagnetic focus guns, SS for permanent magnet focus guns, such as Temescal's SuperSource.
m) Power supply module auxiliary circuit breakers: Both ON

3.2.3 Initial Turn-On

NOTE

If any of the indicators or readings are abnormal, stop at once. Turn off the power supply and refer to section 5.1, Troubleshooting.

a) Turn the main power supply circuit breaker ON. The POWER ON indicator on the high voltage control panel should light. If the indicator does not light, turn the circuit breaker OFF and check the power service.
b) Turn ON the cooling water supply. The TRIODE WATER, DOORS, and AIR indicators should light.
c) Turn ON the KEYLOCK. The PC CARDS & KEYLOCK and the HV OFF control should light. Do not turn on the high voltage.
d) Turn OFF the KEYLOCK and remove the key.

3.2.4 External Interlock Check

WARNING

ALL STATEMENTS REGARDING SAFETY FOR THE OPERATOR AND EQUIPMENT ARE VOID IF THE EXTERNAL INTERLOCKS ARE BYPASSED.

a) Close the vacuum chamber, all access doors and panels, and prepare to evacuate the system.
b) Pump down the vacuum system; monitor the tank pressure on the ion gauge that is connected into the interlock system.
c) The VAC GAUGE indicator should light when the desired

operating pressure is achieved. (To change the interlock closing pressure, refer to the ion gauge manual.) Verify that the indicator light goes out when the vacuum gauge is turned off.

d) Turn on the gun cooling water. The GUN WATER indicator should light.
e) Check the auxiliary interlock (if used). The AUXILIARY indicator should light when the interlock is closed. The FOCUS indicator and the FILAMENT OFF control should also light. If the FOCUS indicator does not light, adjust the LONGitudinal BEAM POSITION for a reading of 1.5A on the focus current meter. (The meter switch must be in the longitudinal position.) If an auxiliary interlock is not used, the AUXILIARY, FOCUS, and FILAMENT OFF indicators should light simultaneously with the GUN WATER indicator.
f) Turn ON the filament power by pressing the FILAMENT ON button. The FILAMENT ON control should light and there should be no emission current reading on the electron gun control meter. Press the meter switch to read filament current and adjust the SCR BIAS control, if necessary, so that the meter reads near the lower green line.
g) Turn OFF the filament by pressing the FILAMENT OFF control.
h) Vary the LONGitudinal BEAM POSITION control to verify that the FOCUS interlock indicator darkens during overcurrent and undercurrent conditions (electromagnetic focus guns only).
i) Repeat the interlock checks and/or the bias adjustment for other vacuum tanks and/or guns used.
j) Turn ON the KEYLOCK. Make sure that the filament(s) is OFF. Turn ON the high voltage by pressing the HIGH VOLTAGE ON control. The high voltage meter should indicate between 0 and 5 kilovolts. Turn the VOLTAGE ADJUST control clockwise. Verify that the high voltage meter reading increases.
k) Turn ON the filaments one at a time, and verify that there is less than 50 mA emission current for each gun.
l) Turn OFF the filaments.
m) Turn the KEYLOCK OFF. The high voltage should turn OFF.

This completes the installation checks. The power supply is now ready for normal operation. Refer to paragraph 3.3.

3.3 NORMAL OPERATION

3.3.1 Precautions

Before operating the power supply, the operator should read paragraphs 3.1 and 3.2 to become familiar with the power supply controls and operating procedures.

3.3.2 Normal Operating Procedure

a) Turn ON the cooling water flow to the power supply and the electron beam guns.
b) Turn ON the main power supply circuit breaker. If conditions in the vacuum chamber are safe for operation, all interlock indicators will light with the exception of the PC CARDS & KEYLOCK and possibly the FOCUS indicators.
c) Turn ON the KEYLOCK. The PC CARDS & KEYLOCK and the high voltage ready (HV OFF control) indicators should light.
d) Turn ON the high voltage by pressing the HV ON control.
e) Adjust the VOLTAGE ADJUST control for the desired operating voltage.
f) For electromagnetic focus guns, adjust the LONGitudinal BEAM POSITION for a 1.5 ampere reading on the focus current meter. The focus and filament ready (FILAMENT OFF control) display signal should light. For permanent magnet guns, turn the LONGitudinal BEAM POSITION control to mid-range. Turn the LATeral BEAM Position (if used) to mid-range.
g) Turn the EMISSION CURRENT control fully counterclockwise and then turn on the filament by pressing the FILAMENT ON control button.
h) Slowly advance the EMISSION CURRENT control until a small reading is observed on the EMISSION CURRENT meter. Do not exceed 0.05 amperes emission current during this step. At the same time, observe the electron beam gun. Advance the EMISSION CURRENT control just until the beam can be seen striking the crucible or another part of the gun. If the beam cannot be seen with 0.05 amperes emission current, slowly turn the BEAM POSITION control(s) while watching for the beam. If the beam still cannot be seen, refer to paragraph 5.1, Troubleshooting.

WARNING

Do not attempt to find the beam by increasing the emission current above 0.05 amperes. Severe damage to the vacuum system may result.

i) Once the beam has been located, adjust the BEAM POSITION controls to center the beam in the crucible pocket.
j) Advance the CURRENT LIMIT control fully clockwise.
k) Increase the EMISSION CURRENT to the desired operating level. The SWEEP controls may also be adjusted to provide the desired sweep pattern.

WARNING

BEAM POSITION IS LARGELY DEPENDENT ON A HIGH VOLTAGE LEVEL. PERFORM THE FOLLOWING ADJUSTMENT AS QUICKLY AS POSSIBLE TO AVOID DAMAGE TO THE ELECTRON BEAM GUNS.

l) After the guns are operating properly, slowly turn the CURRENT LIMIT counterclockwise while closely watching the high voltage meter. At some point, the high voltage will begin to decrease. Turn the CURRENT LIMIT control clockwise until the high voltage returns to its normal level. Turn the CURRENT LIMIT control fully clockwise from this point. This setting gives maximum overcurrent protection and does not interfere with high voltage regulation.

m) If rate monitors are used, adjust each rate range control as follows:
   1) Turn the rate range control fully clockwise.
   2) Set the LOCAL/REMOTE switch to the REMOTE position.
   3) Turn the rate monitor power or level control to 100% or maximum.
   4) Rotate the rate range control counterclockwise until the maximum desired emission current level is reached. This should be no more than 1.4 amperes.

   This completes the rate range adjustment. Return all controls to their normal positions. Repeat the same procedure for the other rate monitors.

To turn off the power supply, turn off the filament(s), turn off the high voltage, and turn off the main power supply circuit breaker.

Once the power supply has been adjusted for a particular job, it can be turned on and off without disturbing any of the controls. This feature allows a production run to be interrupted without making time consuming re-adjustments. To turn the power supply on with the adjustments preset, simply turn on the high voltage, and finally, turn on the filament(s). Either the local or the remote (rate monitor) emission current control for each gun may be selected at any time.

If an electron beam gun filament is changed, the SCR bias adjustment (paragraph 3.2.3) and the beam position adjustments (steps f through k in this paragraph) should be performed for that gun. During these adjustments the other guns in a multiple gun installation can be operated normally. If the vacuum tank or electron beam gun installation is changed, refer to section 2, Installation, and paragraph 3.2, Initial Operation.

SECTION 4

THEORY OF OPERATION

4.1 OVERALL SYSTEM (Figure 4-1)

The CV-14 A and B utilizes a single high voltage supply and regulator to provide simultaneous high voltage to as many as three electron beam guns.

The high voltage direct current supply is basically a three-phase bridge rectifier with a nominal output of 12.5 kilovolt. This voltage is divided between the electron beam gun and the power triode regulator. For safety, the negative high voltage delivered to the electron beam gun is first routed through high voltage relays. These relays keep the high voltage line open and the gun grounded unless all of the vacuum system and beam position interlocks are satisfied. The relays then unground the gun and supply high voltage when the gun filament is turned on. The return path from the electron beam gun is through the low impedance ground connection between the tank and power supply. The total current from all the operating guns is sensed by the total current monitor in the cathode circuit of the power triode. The power triode acts as a controlled variable resistor to keep the voltage across the electron beam gun sources at the desired level.

The high voltage is regulated by the power triode which receives its control signals from the high voltage regulator section. This section compares a sample of the high voltage with a reference set by the VOLTAGE ADJUST control on the front panel and adjusts the triode control signal to maintain the high voltage across the gun at the desired level. Samples of the high voltage across the guns are derived by the voltage divider networks to provide outputs for metering and control.

If the current through the total current monitor exceeds a preset value, usually 1.4 amperes, the high voltage regulator transfers into a current control mode and adjusts the triode control signal to prevent the current from rising above the predetermined value.

The emission current for each gun is controlled by varying the temperature of its filament. Closed loop operation is possible only by monitoring the current

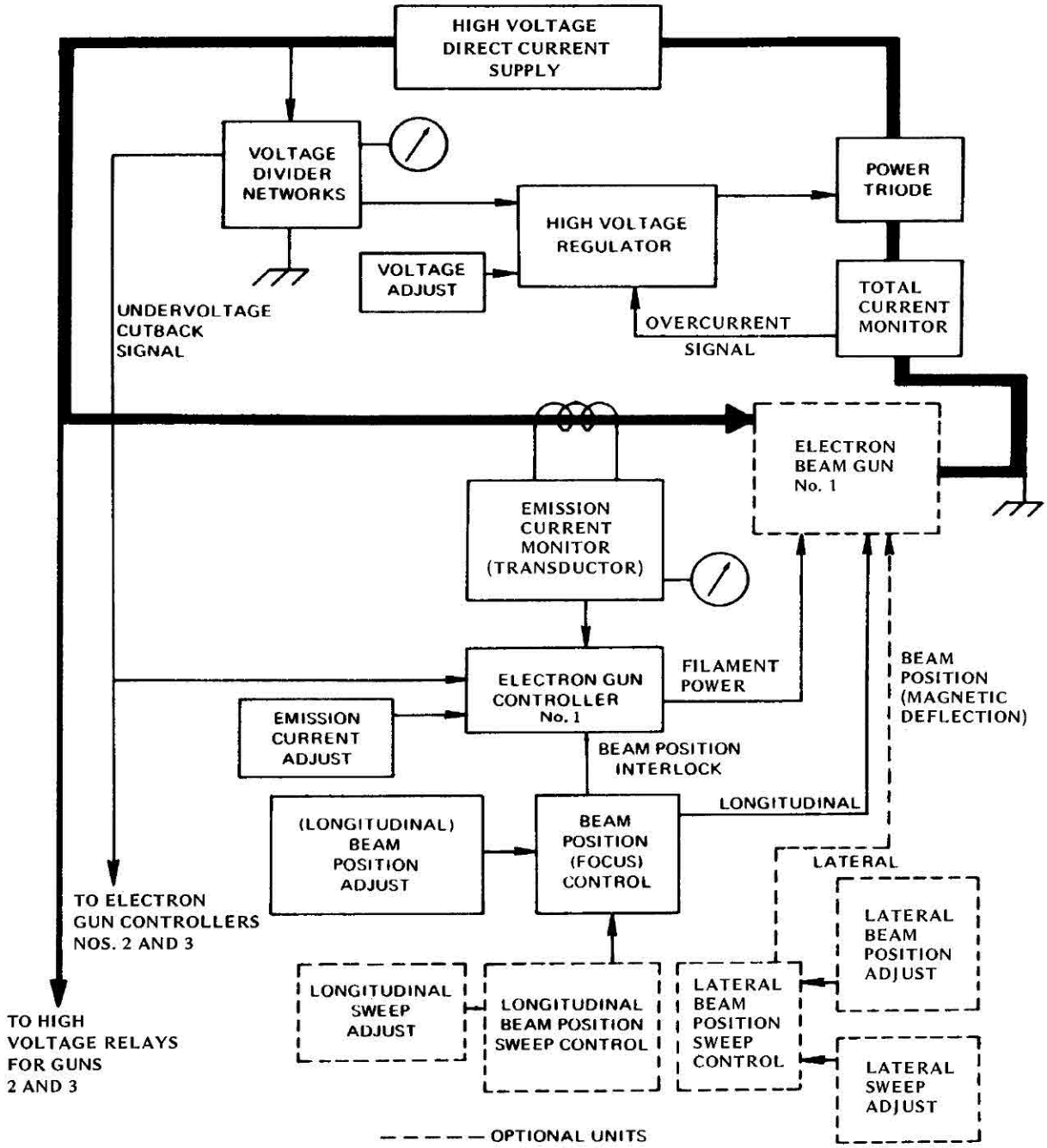

Figure 4-1. CV-14 A and B system block diagram

in the high voltage lead to each gun. To eliminate hazardous floating meters and expensive high voltage isolation networks, a transductor is used for current monitoring. A transductor is a current sensing device which measures the magnetic field surrounding a current carrying wire. The output of the transductor is a voltage proportional to the current in the high voltage lead, but is isolated from high voltage.

In the electron gun controller, the transductor controlled output voltage is compared with a reference set by the EMISSION CURRENT control and adjusts the firing angle of an SCR pair in series with the gun filament transformer primary to maintain proper filament temperature. In the case of an arc-down, or similar low voltage operating condition, a signal from the voltage divider networks cuts back the filament power to prevent overheating and possible damage to the filament.

The electron gun filament is operated at a high negative potential with respect to the material to be evaporated. If the electrons were accelerated in a straight line (line-of-sight) to the crucible, the filament life would be shortened considerably due to contamination and ion bombardment. To extend filament life, the filament is usually located out of the line-of-sight of the crucible and the electron beam is bent by a magnetic field to strike the evaporant material.

The magnetic field comes from either a permanent magnet or an electromagnetic focus coil in the electron beam gun assembly. Current for the coil is provided by the beam position focus supply which supplies an adjustable current for the longitudinal focus coil. This coil bends the beam the required amount. As current is varied in the coil, the beam position changes. The beam position focus supply is also equipped with a sensing circuit that keeps a gun control interlock open unless the focus current is within specified, adjustable limits.

The (optional) sweep focus power supply can sweep the beam in both the longitudinal and lateral directions. The two sweep circuits are isolated from each other and both are adjustable for sweep frequency and amplitude as well as beam position. The longitudinal sweep circuit drives through the standard beam position focus circuits and maintains the operation of the standard position interlock.

4.2 HIGH VOLTAGE SECTION, DETAILED CIRCUIT ANALYSIS

4.2.1 High Voltage Power Supply (Figure 4-2)

The high voltage power supply consists of a high voltage power transformer and a three-phase full wave rectifier. A network across each secondary protects the rectifiers from transients. A bleed resistor is used to discharge the power supply when input power is removed. The output of the rectifier is protected by the combination of a resistor-capacitor filter and series surge limiting resistors.

4.2.2 High Voltage Relays (Figure 4-3)

To provide maximum operator safety, the electron beam gun filament is grounded until ready for use. When the FILAMENT ON pushbutton is pressed, the filament is first ungrounded; then approximately 400 milliseconds later, the high voltage is connected to the gun. The operation for multigun installations is identical; therefore, only one gun installation will be discussed.

One direct current power supply is used to actuate all of the high voltage relays. The 24V from this supply is connected to a delay network through relay contacts that close when the FILAMENT ON pushbutton is pressed, applying power to the electron beam gun filament. All vacuum tank interlocks must be closed before power can be applied to the filaments and this relay.

4.2.3 Triode Cathode Bias Network and High Voltage Regulator Power Supplies (Figure 4-4)

To eliminate the need for an additional power supply, the cathode of the triode is held at 75V by Zener diodes in the cathode circuit. The 185V direct current power supply is used to ensure that the Zeners are always forward biased. This supply also provides power to the triode control grid driver.

4.2.4 High Voltage Regulation (Figures 4-5 and 4-6)

Referring to the high voltage regulator block diagram, the positive reference voltage from the VOLTAGE ADJUST control is summed with the negative high voltage sample from the voltage divider network. The resultant voltage at the summing junction is just enough to keep the amplifier operating in its linear region. The amplifier output is then passed through a gate to the power amplifiers which then feed the grid of the power triode. In an overcurrent condition, the gate passes the overcurrent signal instead of the voltage control signal and the system becomes a current regulator rather than a voltage regulator.

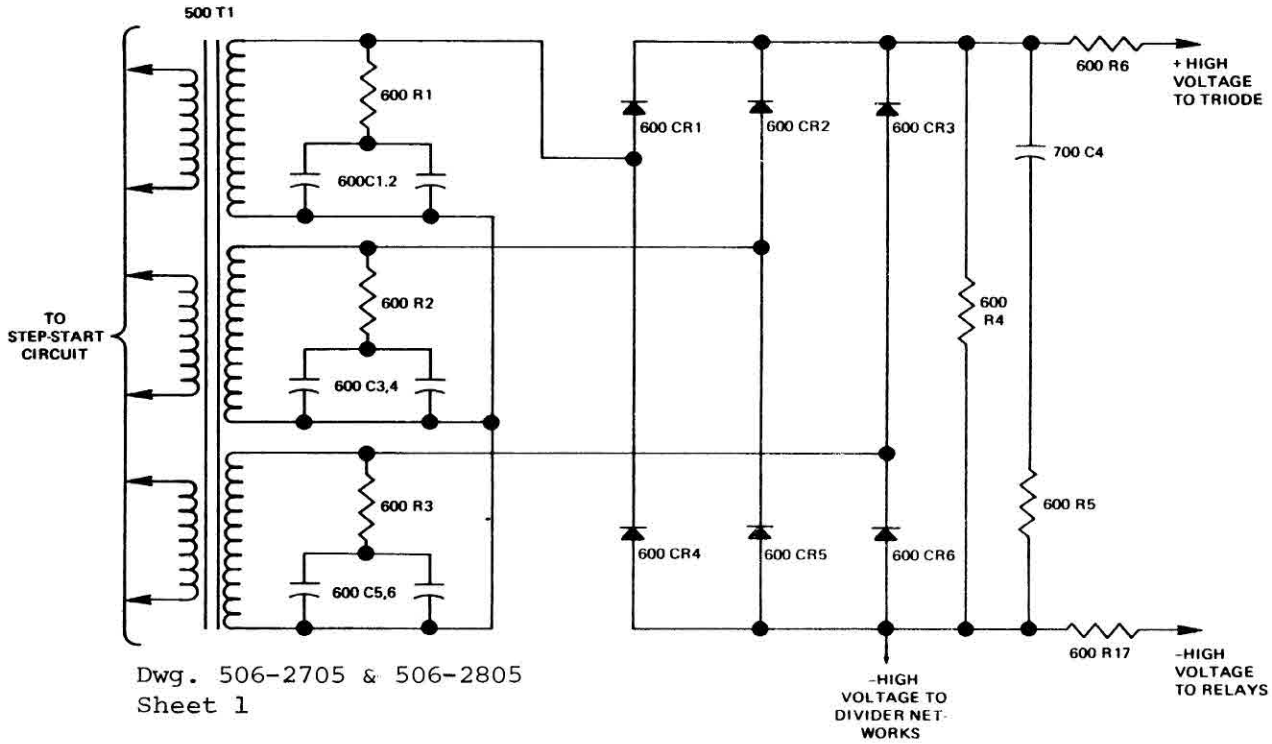

Dwg. 506-2705 & 506-2805
Sheet 1

Figure 4-2. CV-14 A and B high voltage power supply

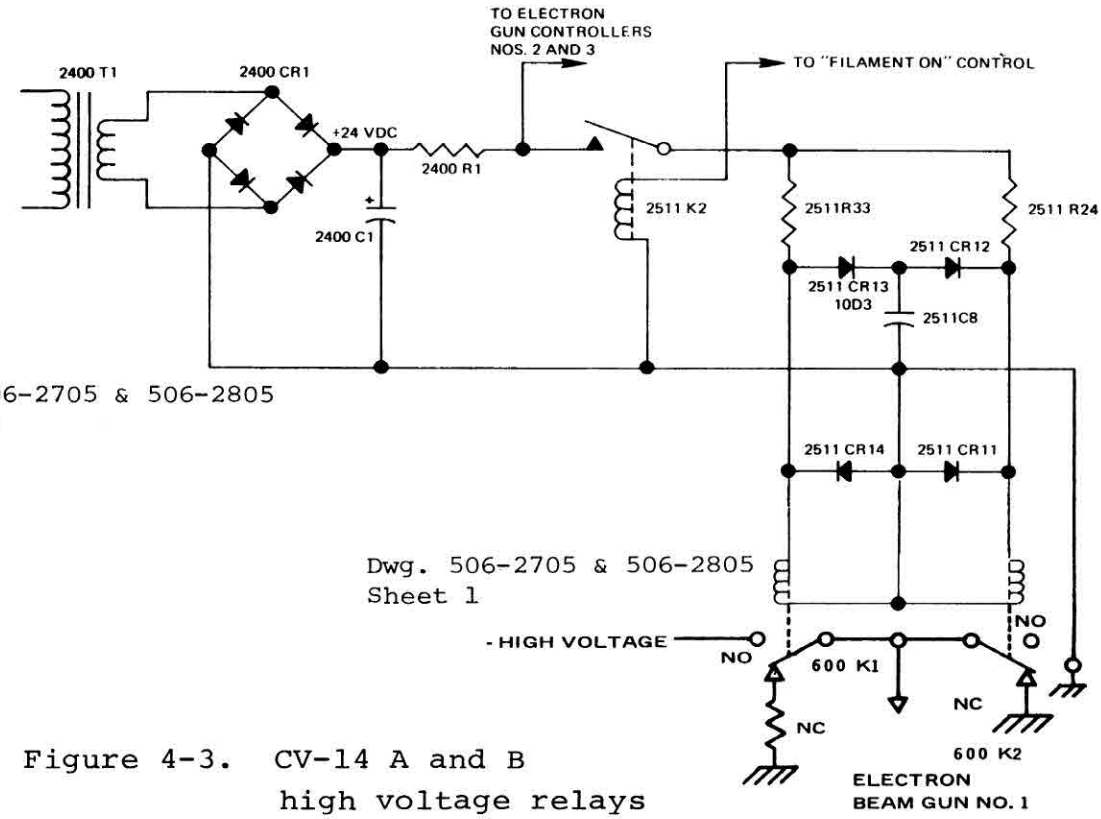

Dwg. 506-2705 & 506-2805
Sheet 2

Dwg. 506-2705 & 506-2805
Sheet 1

Figure 4-3. CV-14 A and B high voltage relays

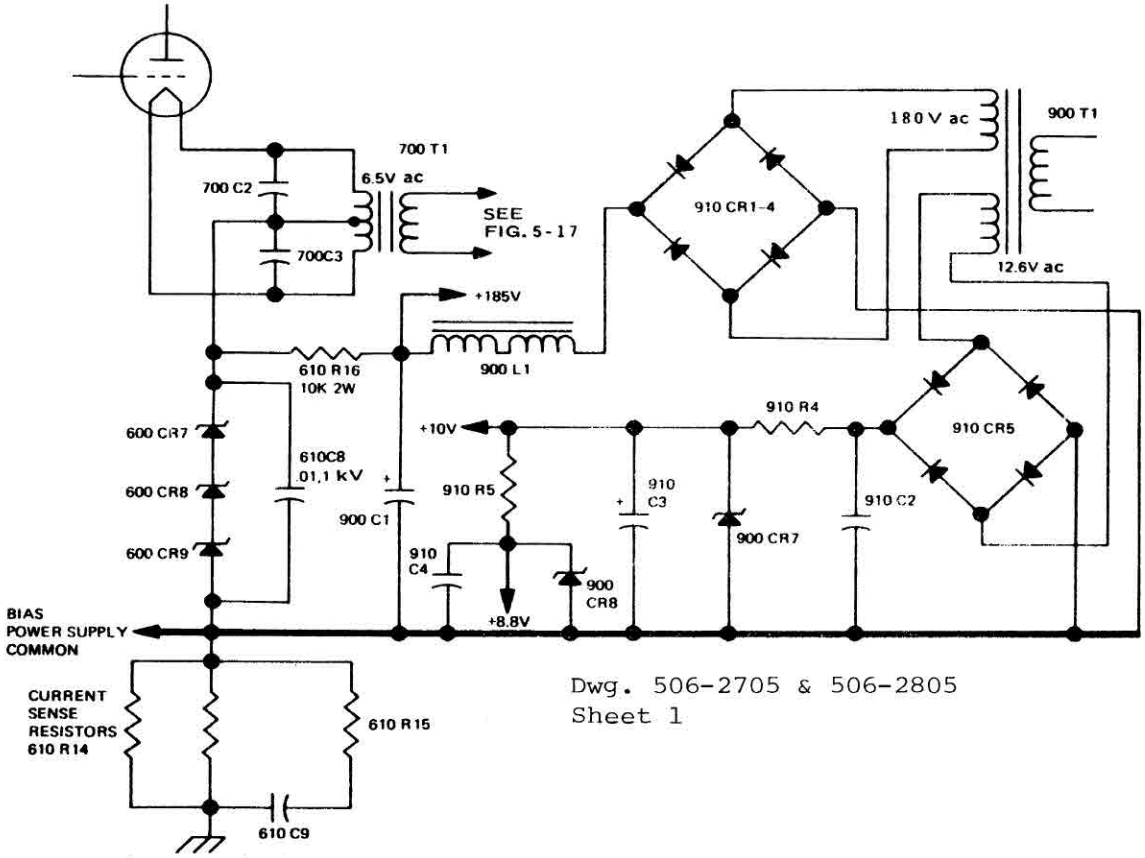

Dwg. 506-2705 & 506-2805
Sheet 1

Figure 4-4. CV-14 A and B triode cathode network and bias (high voltage) power supply

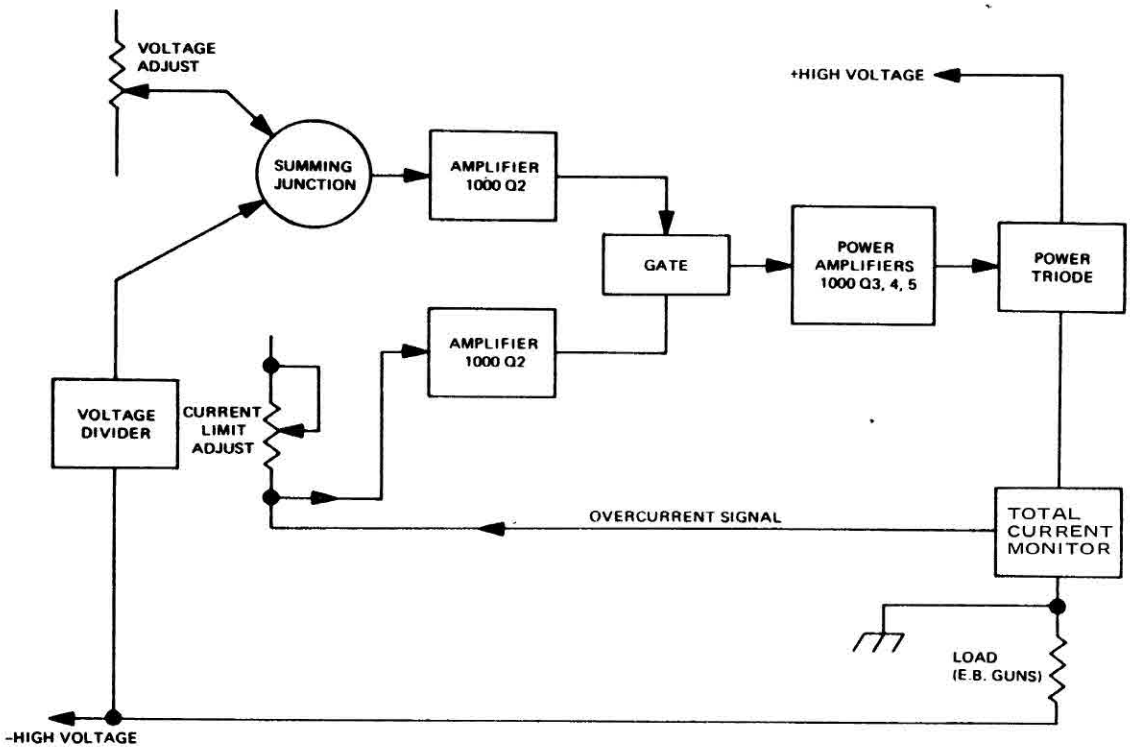

Figure 4-5. CV-14 A and B high voltage regulation block diagram

Under low voltage and current conditions, the power triode is nearly cut off, which increases the tube resistance. It is not possible to decrease the electron beam voltage to zero under these low current conditions because the power triode is paralleled by the cooling water. For low voltage, low current operation, the conductivity of the water must be held to a minimum to reduce this bypassing effect.

4.2.5 High Voltage Dividers (Figure 4-6)
Four independent high voltage dividers supply the control and metering signals necessary for proper operation. These dividers also provide a bleeder path to ground for the high voltage supply. One divider (R7) sends a high voltage sample to the triode regulator circuits. This divider terminates at the top of the current sense resistors, not at chassis ground.

The second divider (R10) supplies a feedback signal to the electron gun control circuit boards.

The third divider (R9) provides a signal to the control console front panel high voltage meter. A shunt resistor supplies protection from high voltage should the meter movement open.

The fourth divider (R8) provides an additional load for the triode tube.

4.3 ELECTRON GUN CONTROLLER

4.3.1 Overall Operation (Figure 4-7)
The electron beam gun is operated in an emission limited condition. The temperature of the filament determines the emission capability of the filament, and hence the beam current. The temperature of the filament is controlled by the power available to the primary of the filament transformer.

For closed loop operation, the current in the high voltage lead is sensed by the transductor circuits. The current signal is then summed with a reference voltage from either the EMISSION CURRENT control or from an external, customer-supplied rate monitor. The summed signal is amplified and is used to control the firing of a silicon controlled rectifier pair in the filament transformer primary circuit. The conduction angle of the silicon controlled rectifier pair determines the power supplied to the filament transformer primary winding.

If the high voltage is off when the filament is turned on, the filament could be driven at full power trying

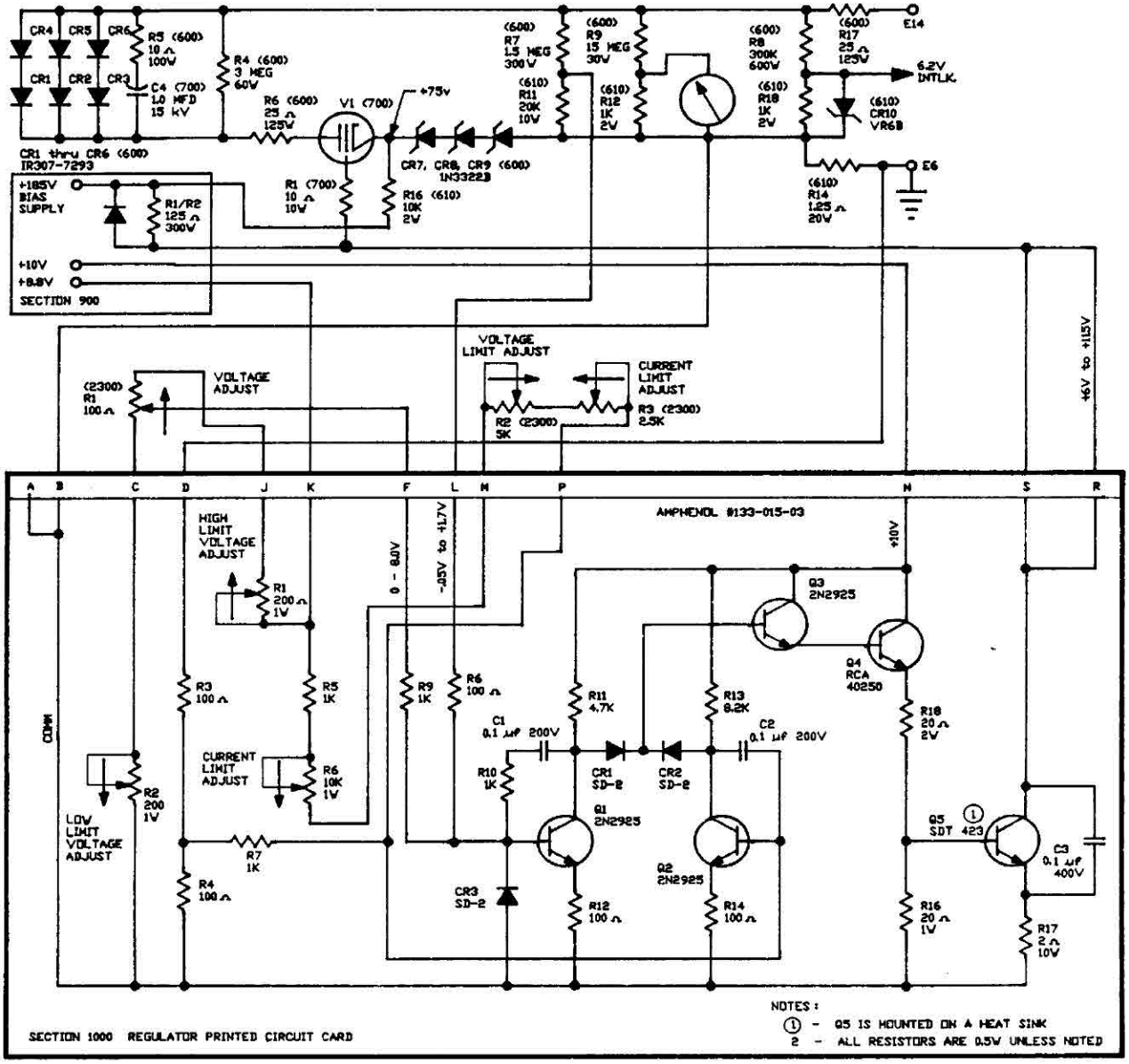

Figure 4-6. CV-14 A and B High voltage regulator

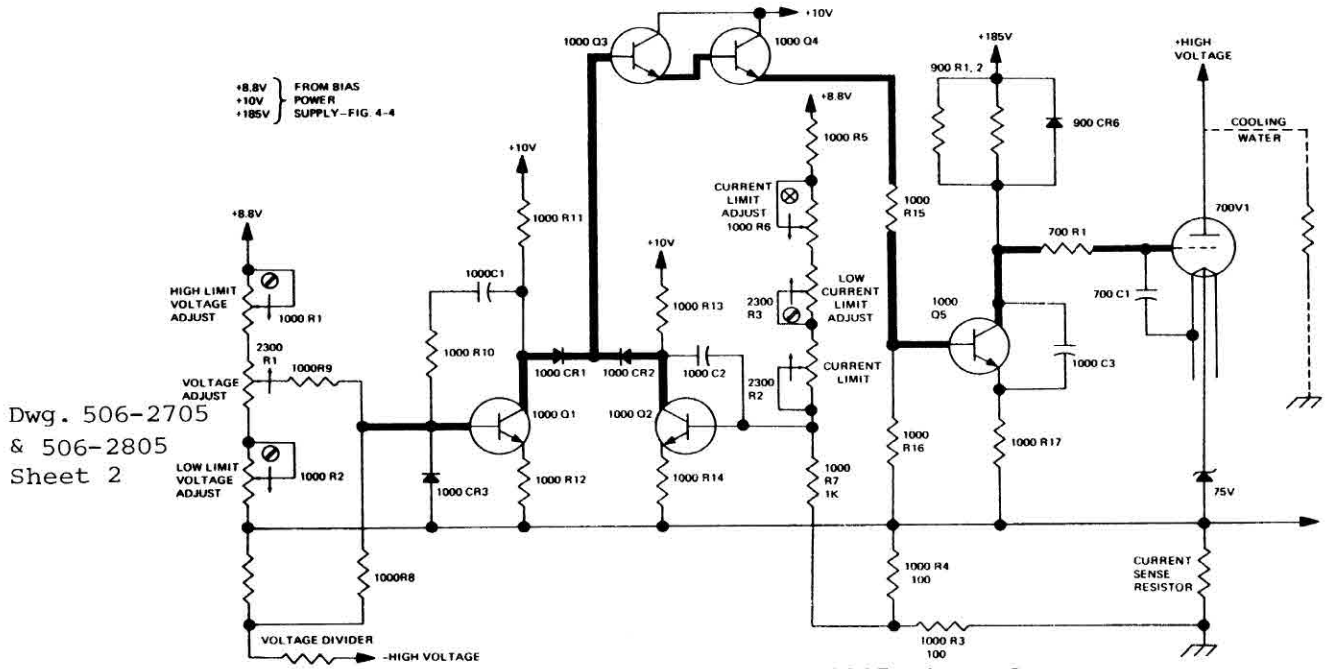

Dwg. 506-2705 & 506-2805 Sheet 2

Dwg. 506-2705 & 506-2805 Sheet 1

Figure 4-6. CV-14 A and B high voltage regulator

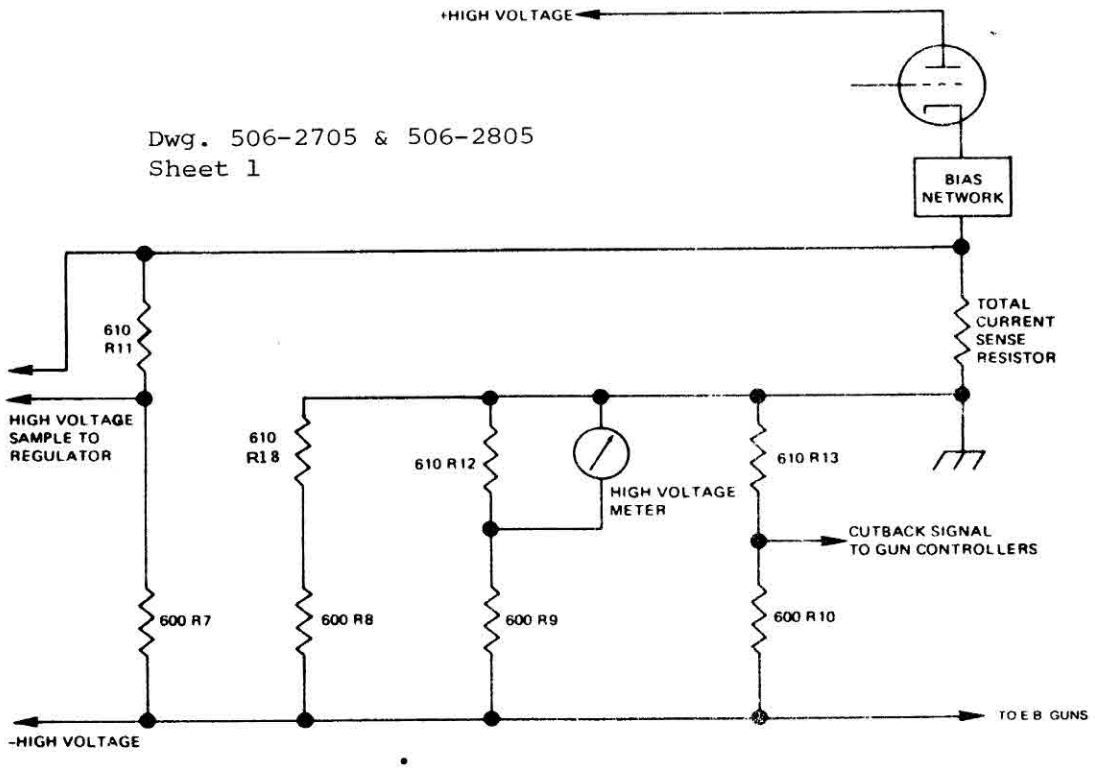

Dwg. 506-2705 & 506-2805 Sheet 1

Figure 4-7. CV-14 A and B high voltage dividers

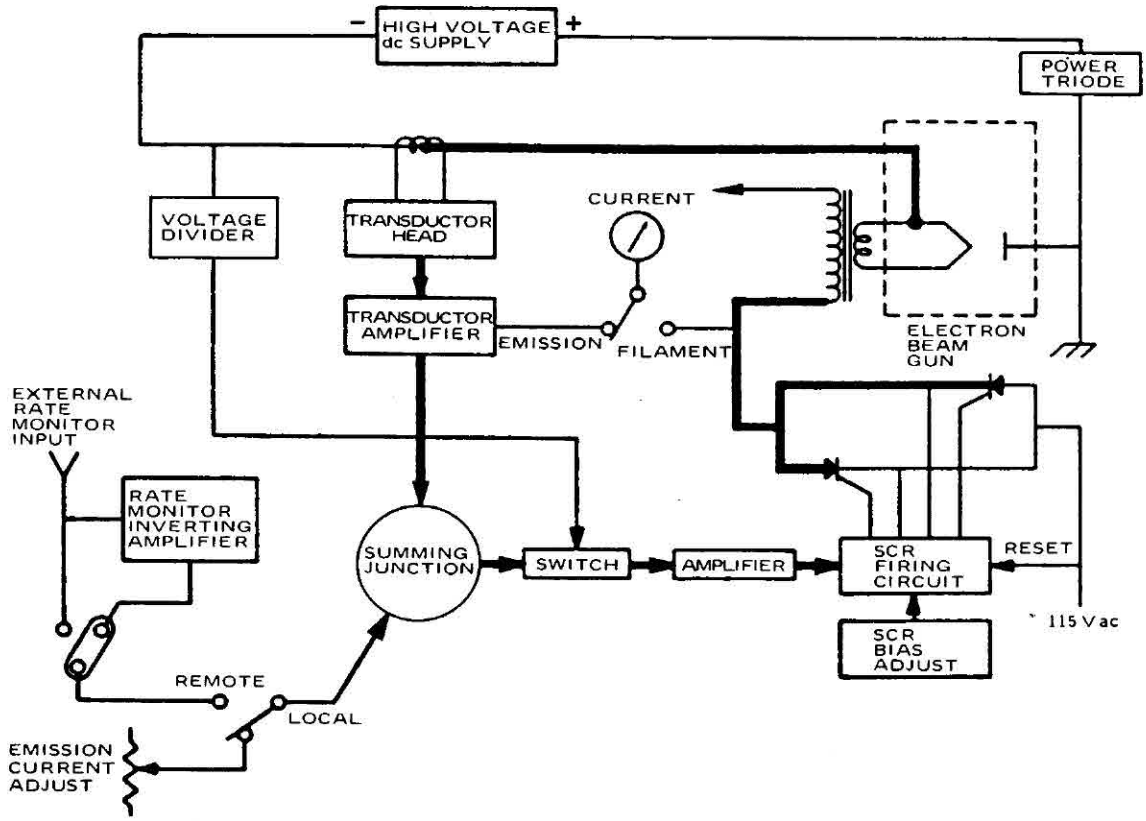

Figure 4-7. CV-14 A and B emission current regulation block diagram

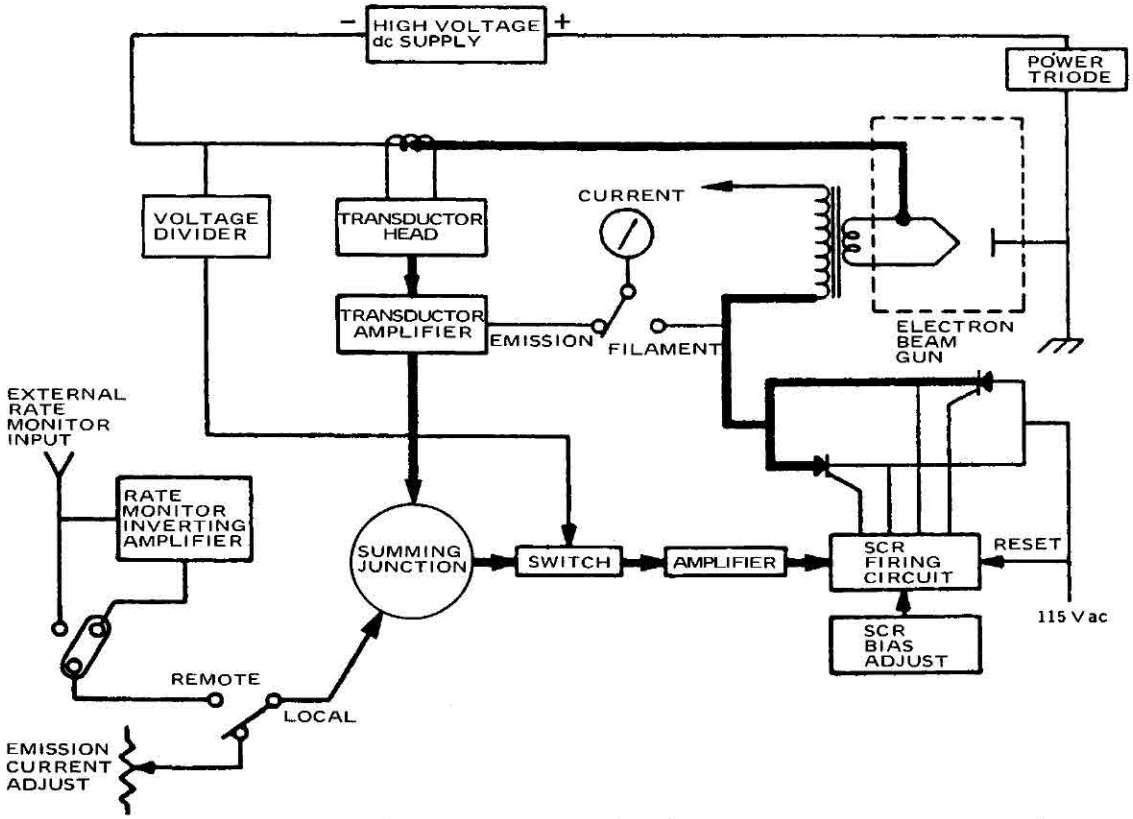

Figure 4-8. CV-14 A and B emission current regulation block diagram

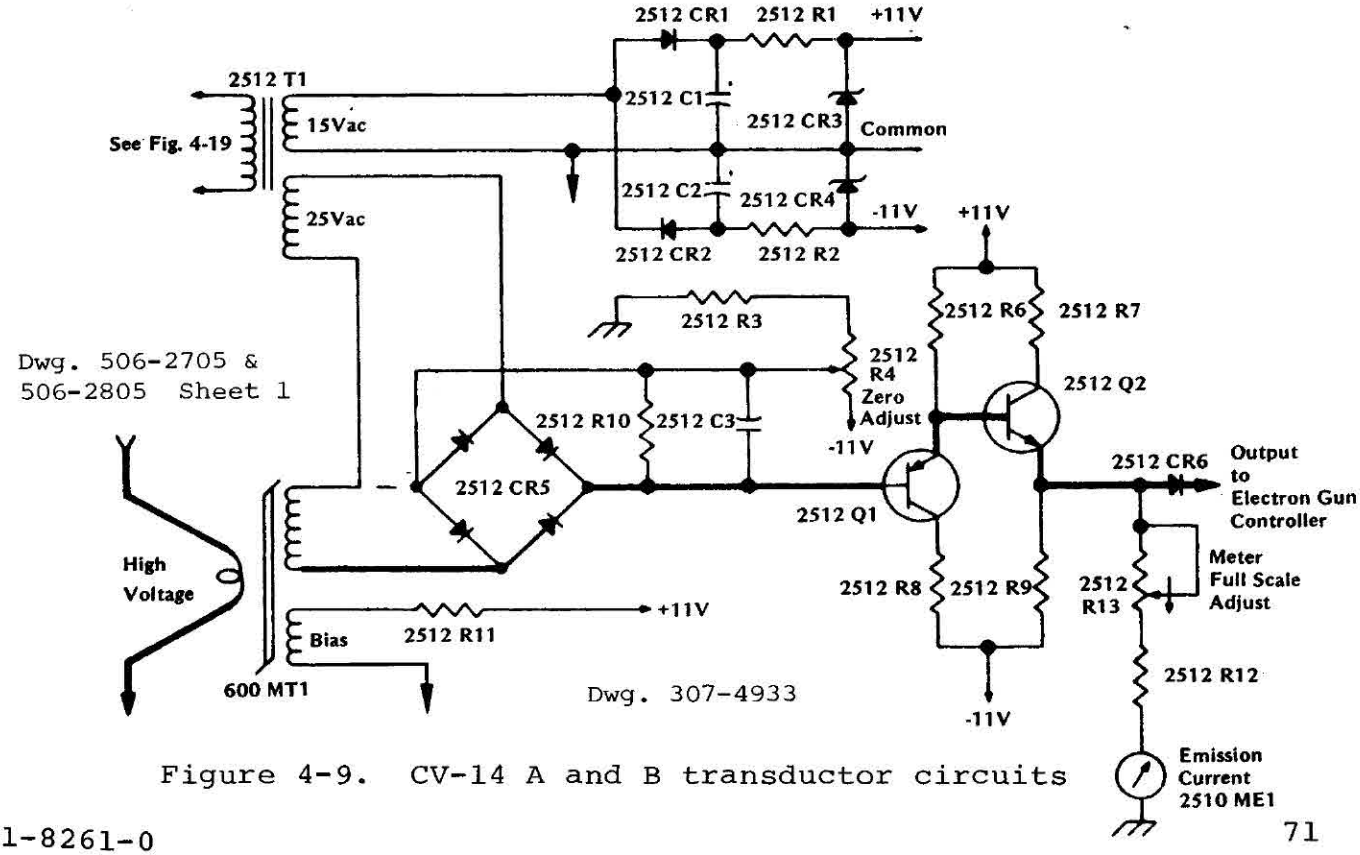

Figure 4-9. CV-14 A and B transductor circuits

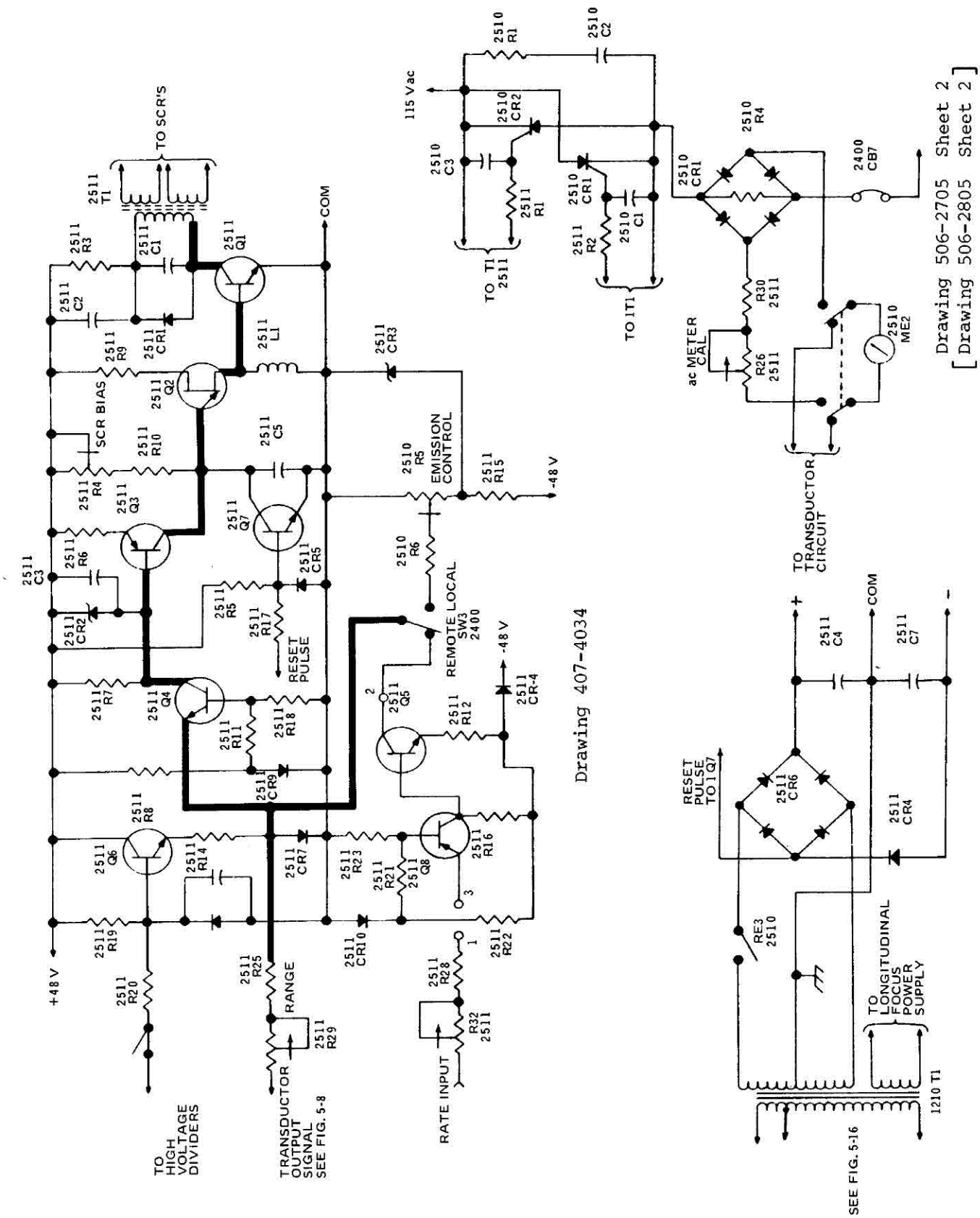

Figure 4-10. CV-14 A and B electron gun control circuit

to supply the current that the EMISSION CURRENT control demands. This condition would overheat and very likely damage the filament. To prevent overheating the filament under these conditions, a high voltage signal is used to switch on the regulator and transductor summing amplifier. With no high voltage present, the silicon controlled rectifier firing circuit receives no control signal and remains cut back to the bias level.

The minimum current through the filament is adjusted by the silicon controlled rectifier bias control to keep the filament just below emitting temperature so that the filament does not have to undergo a full temperature cycle every time the high voltage drops or the EMMISSION CURRENT control is turned to zero.

4.3.2 Transductor Current Sensing

Emission current monitoring is accomplished by a transductor head in each high voltage electron beam gun lead. The transductor head is an encapsulated toroidal saturable reactor with two direct current windings and one alternating current winding. One of the direct current windings is the high voltage lead through the center of the toroid. The other direct current winding carries about 10 mA of bias current that is necessary to keep the transductor operating in its linear range. The third winding carries enough alternating current to saturate the core on peaks. As the total direct current flowing in the bias and high voltage windings is increased, the core saturates at a lower value of alternating current. This impedance change is sensed by rectifying the alternating current. The rectified voltage change is proportional to the change of the total direct current flowing in the transductor head. Since the bias current is constant, the output voltage is proportional to the current in the high voltage lead.

The signal is current amplified and is used to drive the EMISSION CURRENT meter through the METER FULL SCALE ADJUST control and the meter switch. The amplified signal is also sent to the gun control circuit board.

4.3.3 Emission Control

Power for the electron gun control circuit is supplied by a transformer and its associated full wave rectifier. To protect the filament from thermal shock upon application of power, the filament power is slowly increased instead of being suddenly applied. This action is controlled by the charging of the power supply capacitors and takes approximately 500 milliseconds.

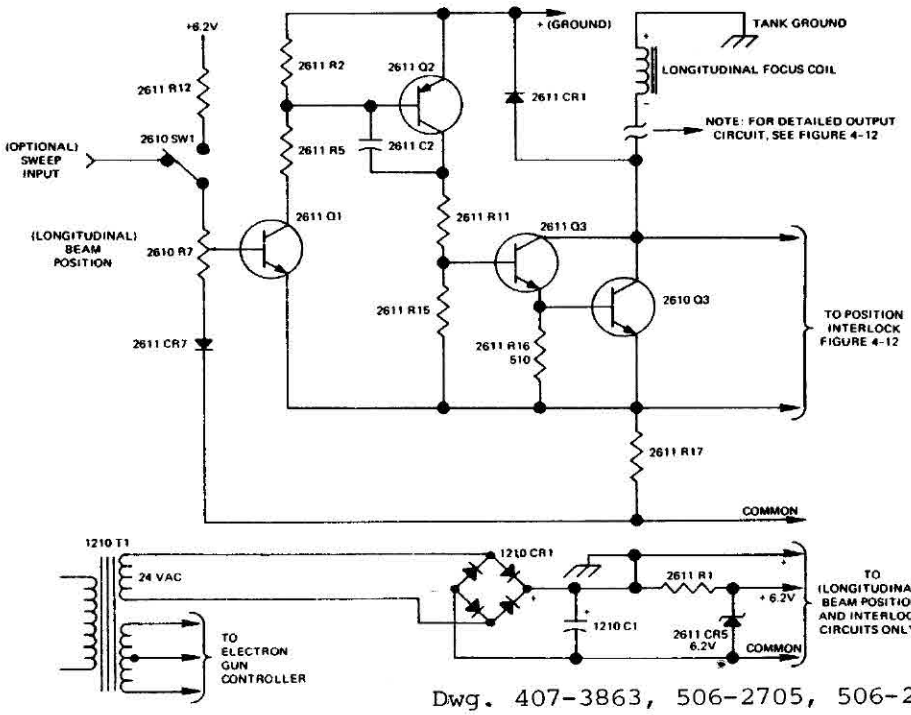

Dwg. 407-3863, 506-2705, 506-2805 Sheet 2

Figure 4-11. CV-14 A and B longitudinal beam position (focus) control circuit

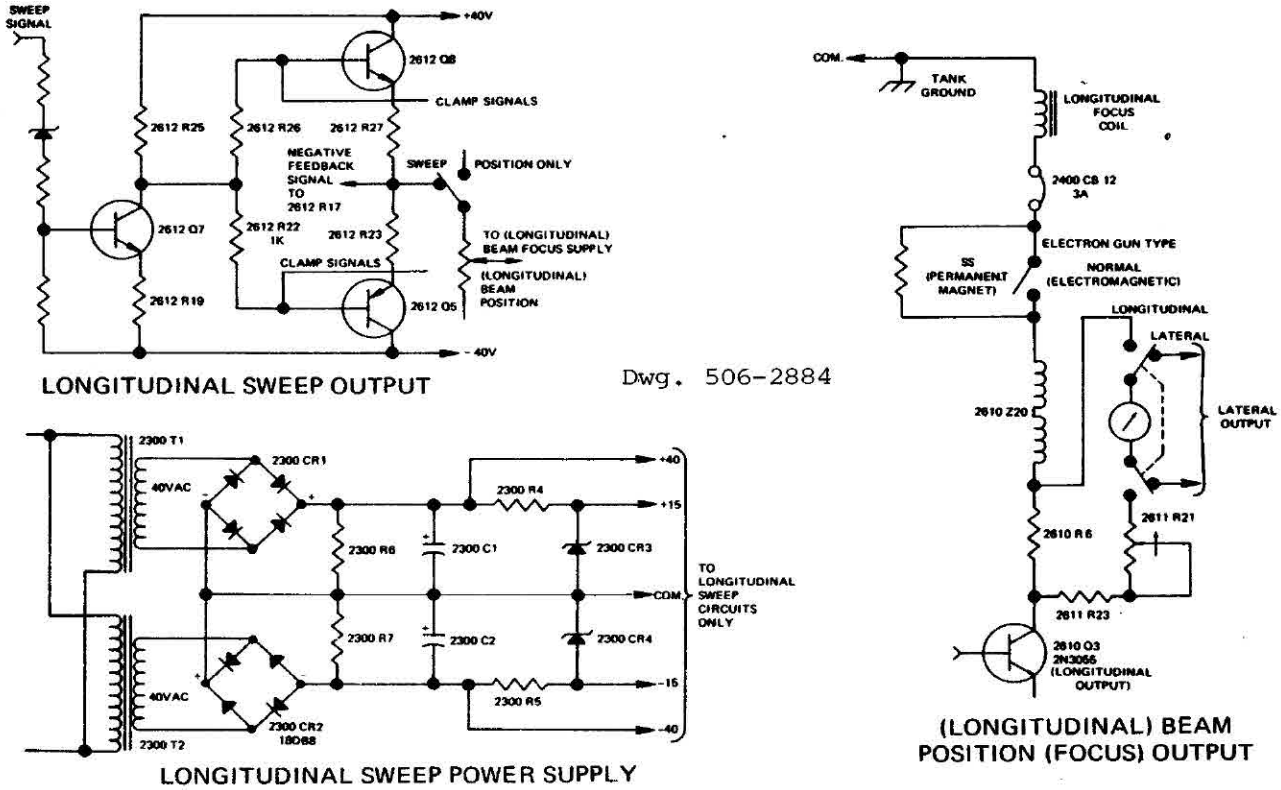

Figure 4-12. CV-14 A and B longitudinal beam position and sweep control circuit

The reference voltage for the emission control circuits is obtained from either the EMISSION CURRENT control or the conditioned external rate monitor signal. The reference voltage source is selected by the LOCAL/REMOTE switch on the circuit breaker panel.

If a positive rate signal is used, inverting and level shifting amplifiers are used by connecting pins 1 and 3 on the circuit board. If a negative signal is used, the amplifier is bypassed by connecting pins 1 and 2. The RATE RANGE potentiometer adjusts the rate input signal.

Metering of the filament primary current is accomplished by rectifying the voltage across a current sensing resistor.

4.4 BEAM POSITION (FOCUS) CIRCUITS

The electron beam gun filament is placed out of the line-of-sight of the source crucible to prevent ion bombardment and contamination. Bending the electron beam so that it strikes the material to be evaporated is the function of the focus circuits. The magnetic fields necessary for positioning the beam are provided by controlled currents in the longitudinal and (optional) lateral focus coils. The LONGitudinal FOCUS CURRENT also controls an electron gun controller interlock. This prevents the application of filament power and high voltage unless the longitudinal focus current is within the desired limits. A switch is installed to defeat the interlock if a permanent magnet electron beam gun is used.

4.4.1 Longitudinal Beam Position Focus Control

The LONGitudinal BEAM POSITION control is a direct coupled amplifier. Negative feedback is provided by referencing the amplifier to the top of the output current sensing resistor.

The amplifier input signal voltage is selected by the LONGitudinal BEAM POSITION control. In a BEAM POSITION control unit, the control potentiometer is referenced to the 6.2V power supply. In a BEAM POSITION SWEEP control unit (optional), the control reference can be switched between the 6.2V power supply for position-only operation, and the output of the longitudinal sweep circuit for sweep operation, through S1 located within the sweep control chassis.

The output transistor drives the focus coil through a metering resistor and transient suppressor. For permanent magnet guns, a current limiting resistor is switched

in series with the focus coil.

For positive current return, the longitudinal focus coil common terminal should be grounded at the tank. The power supply for the beam position control circuit is a full wave bridge with the positive side grounded. The common is therefore 30V negative with respect to chassis ground.

4.4.2 Beam Position Focus Interlock (Electromagnetic Focus Guns Only)

The focus interlock circuit energizes an interlock relay only if the longitudinal beam position current is within the limits set by the low limit and high limit controls and the focus coil is not short circuited.

The focus coil current and voltage provide the signal inputs to the interlock circuit through a current sensing resistor and a voltage divider.

4.5 SWEEP CIRCUITS (Optional)

The sweep generating circuits are identical for both lateral and longitudinal sweeps. The only differences between the two are in the output stages. The lateral sweep generating circuit will be discussed.

The sweep is generated by transistors Q1 through Q4. They function as constant current sources with Q1 supplying approximately twice the current of Q2. At the beginning of each cycle, Q1 charges the switch selected timing capacitor through CR1. Since the capacitor is being charged with a constant current, the voltage rise across the capacitor will be a linear ramp. The linear ramp continues until the firing voltage of Q3, a unijunction transistor, is reached. When Q3 fires, diode CR1 is reverse biased, isolating the timing capacitor from current source Q1. Q1 now supplies the holding current for Q3. The timing capacitor discharges linearly through Q2; the other constant current source. The capacitor will discharge until CR1 is forward biased, at which point current source Q1 is again connected to Q2 and the timing capacitor. The current through Q3 now drops below the holding value and Q3 turns off. The output waveform, a triangle wave, is current amplified by Q4.

The output of Q4 then goes to A1, and operational amplifier, through the SWEEP control R6. The sweep waveform is summed with the negative feedback from the output amplifier and the voltage from the BEAM POSITION control R5.

The output of A1 is connected to Q7 through a voltage level shifting network zero adjust, R39, R16, and CR2. Q7 drives the complementary symmetry output amplifier. The BEAM POSITION control is a front panel control for the lateral and longitudinal sweep supply, but is also a service adjustment for the longitudinal sweep supply. The longitudinal beam position can also be controlled by the BEAM POSITION control, discussed in the Beam Position Focus Control section.

4.5.1 Lateral Sweep Output

Q5, Q6, Q8, Q9, Q1, and Q2 form a complementary symmetry power amplifier which drives the lateral focus coil through transient suppressor Z20. The average current is measured across R1 with the meter calibrating resistors R20 and R22 located on the longitudinal focus board. To prevent ground loops, the lateral focus coil common (return) lead should not be grounded externally.

4.5.2 Longitudinal Sweep Output

Since the longitudinal sweep amplifier only has to drive the longitudinal focus board, the high power output transistors Q6 and Q9 are eliminated from this section and from figure 4-15. The longitudinal sweep amplifier drives the input to the focus board through 2640SW8 and 2640R1, the BEAM POSITION control.

4.6 PRIMARY POWER (Figures 4-8)

The three-phase input is applied to the main 70A [50A] circuit breaker. Power from the circuit breaker is applied to the control transformer, to the high voltage step-start panel, and through a 5A circuit breaker to the longitudinal focus and electron gun controller power supplies. The control transformer output is connected directly to the main 15A circuit breaker which in turn feeds the other primary power circuit breakers.

The control 15A circuit breaker is in series with the primary interlocks. The water flow interlock must be satisfied to energize the relay to apply power to the triode filament, the triode cooling fan, and the triode bias and high voltage regulator power supplies.

The control power interlocks are all local. That is, they can be satisfied without a vacuum tank or electron beam gun in the system. The control power interlocks will not allow the high voltage to be turned on unless triode cooling water and air are present in the required amount, and unless the removable panels and printed circuit boards are in place. The front panel keylock switch must also be turned on. Front panel indicator lights show which interlocks are closed.

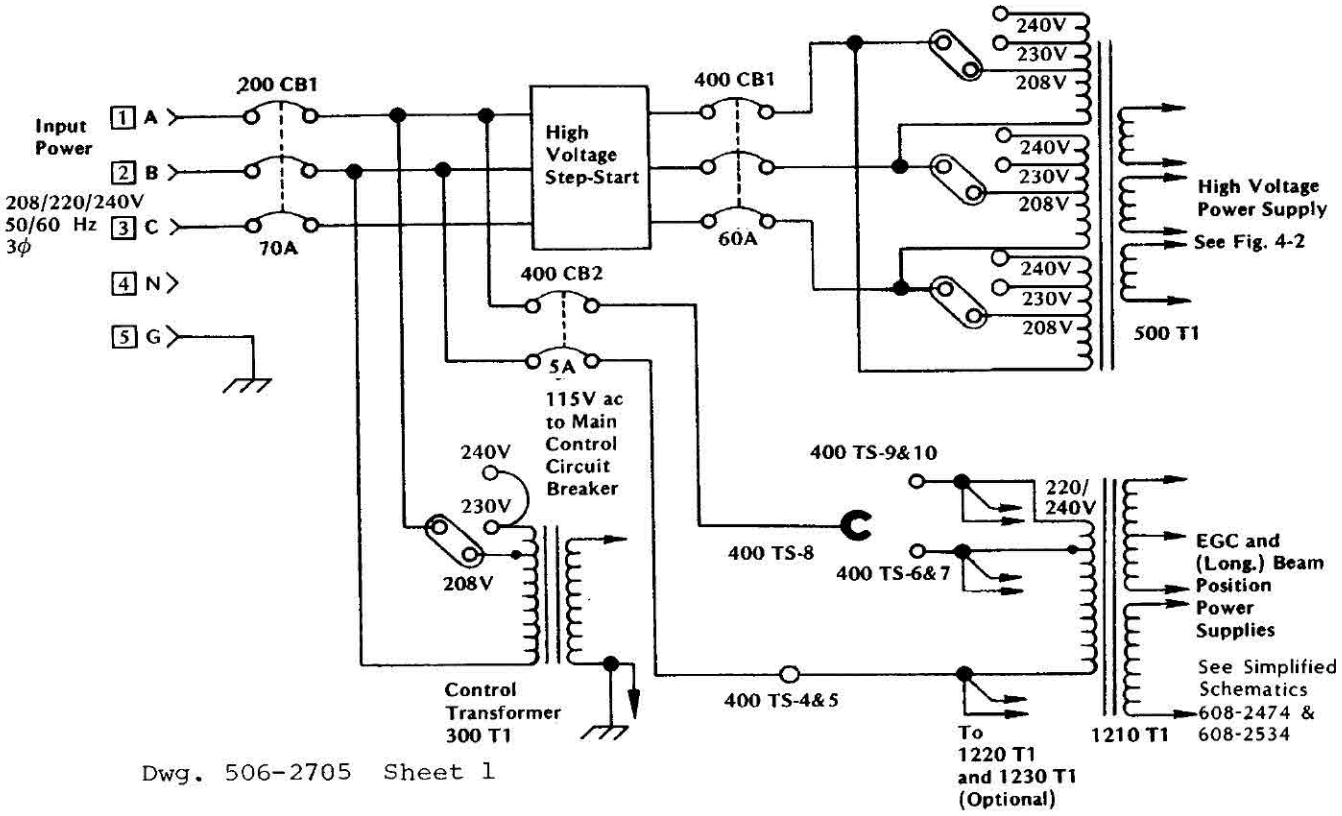

Dwg. 506-2705 Sheet 1

Figure 4- 8 A. CV-14 A primary power input

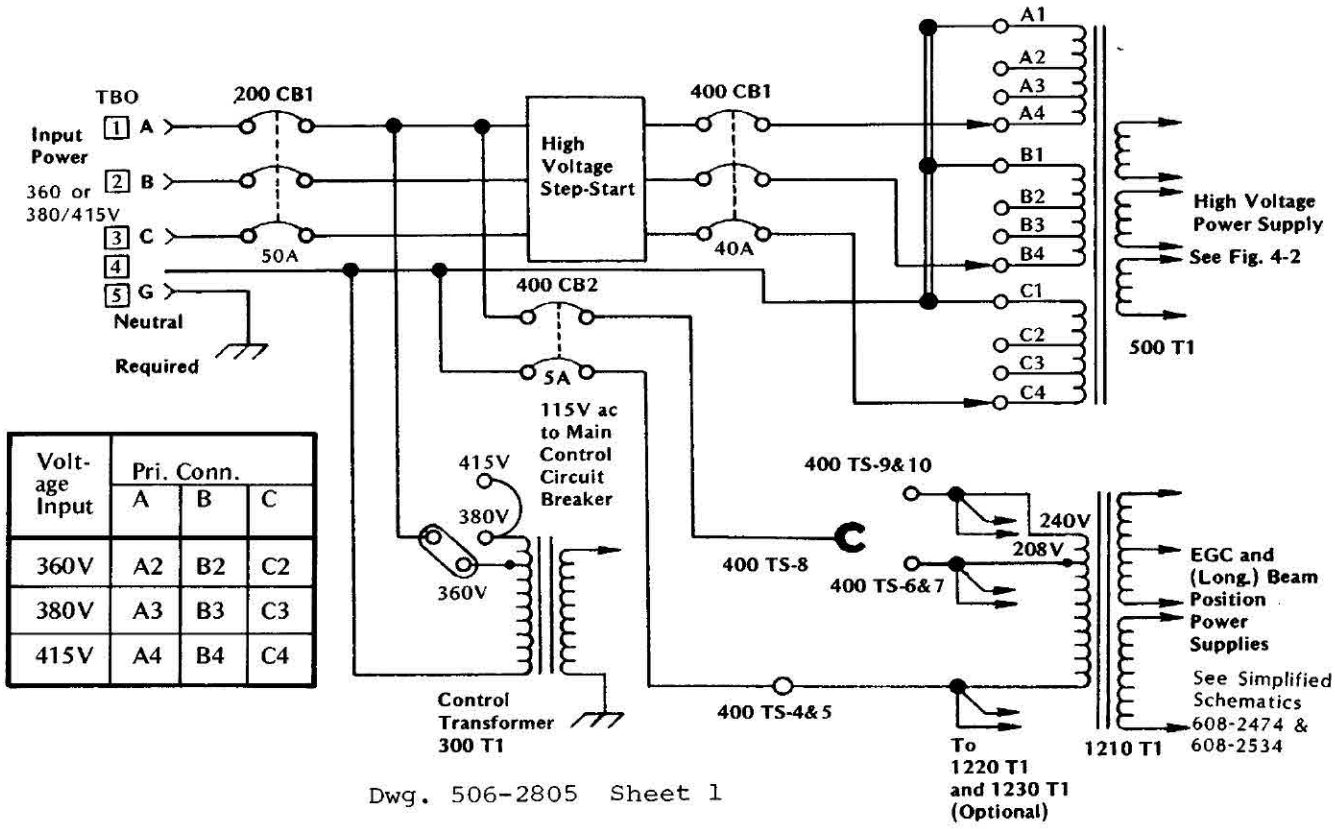

Voltage Input	Pri. Conn. A	B	C
360V	A2	B2	C2
380V	A3	B3	C3
415V	A4	B4	C4

Dwg. 506-2805 Sheet 1

Figure 4- 8 B. CV-14 B primary power input

The reference voltage for the emission control circuits is obtained from either the EMISSION CURRENT control or the conditioned external rate monitor signal. The reference voltage source is selected by the LOCAL/REMOTE switch on the circuit breaker panel.

If a positive rate signal is used, inverting and level shifting amplifiers are used by connecting pins 1 and 3 on the circuit board. If a negative signal is used, the amplifier is bypassed by connecting pins 1 and 2. The RATE RANGE potentiometer adjusts the rate input signal.

Metering of the filament primary current is accomplished by rectifying the voltage across a current sensing resistor.

4.4 BEAM POSITION (FOCUS) CIRCUITS

The electron beam gun filament is placed out of the line-of-sight of the source crucible to prevent ion bombardment and contamination. Bending the electron beam so that it strikes the material to be evaporated is the function of the focus circuits. The magnetic fields necessary for positioning the beam are provided by controlled currents in the longitudinal and (optional) lateral focus coils. The LONGitudinal FOCUS CURRENT also controls an electron gun controller interlock. This prevents the application of filament power and high voltage unless the longitudinal focus current is within the desired limits. A switch is installed to defeat the interlock if a permanent magnet electron beam gun is used.

4.4.1 Longitudinal Beam Position Focus Control

(Figures 4-11 and 4-12)

The LONGitudinal BEAM POSITION control is a direct coupled amplifier. Negative feedback is provided by referencing the amplifier to the top of the output current sensing resistor.

The amplifier input signal voltage is selected by the LONGitudinal BEAM POSITION control. In a BEAM POSITION control unit, the control potentiometer is referenced to the 6.2V power supply. In a BEAM POSITION SWEEP control unit (optional), the control reference can be switched between the 6.2V power supply for position-only operation, and the output of the longitudinal sweep circuit for sweep operation, through S1 located within the sweep control chassis.

The output transistor drives the focus coil through a metering resistor and transient suppressor. For permanent magnet guns, a current limiting resistor is switched

in series with the focus coil.

For positive current return, the longitudinal focus coil common terminal should be grounded at the tank. The power supply for the beam position control circuit is a full wave bridge with the positive side grounded. The common is therefore 30V negative with respect to chassis ground.

4.4.2 Beam Position Focus Interlock (Electromagnetic Focus Guns Only) (Figure 4-13)
The focus interlock circuit energizes an interlock relay only if the longitudinal beam position current is within the limits set by the low limit and high limit controls and the focus coil is not short circuited.

The focus coil current and voltage provide the signal inputs to the interlock circuit through a current sensing resistor and a voltage divider.

4.5 SWEEP CIRCUITS (Optional) (Figure 4-14)
The sweep generating circuits are identical for both lateral and longitudinal sweeps. The only differences between the two are in the output stages. The lateral sweep generating circuit will be discussed.

The sweep is generated by transistors Q1 through Q4. They function as constant current sources with Q1 supplying approximately twice the current of Q2. At the beginning of each cycle, Q1 charges the switch selected timing capacitor through CR1. Since the capacitor is being charged with a constant current, the voltage rise across the capacitor will be a linear ramp. The linear ramp continues until the firing voltage of Q3, a unijunction transistor, is reached. When Q3 fires, diode CR1 is reverse biased, isolating the timing capacitor from current source Q1. Q1 now supplies the holding current for Q3. The timing capacitor discharges linearly through Q2; the other constant current source. The capacitor will discharge until CR1 is forward biased, at which point current source Q1 is again connected to Q2 and the timing capacitor. The current through Q3 now drops below the holding value and Q3 turns off. The output waveform, a triangle wave, is current amplified by Q4.

The output of Q4 then goes to A1, and operational amplifier, through the SWEEP control R6. The sweep waveform is summed with the negative feedback from the output amplifier and the voltage from the BEAM POSITION control R5.

4.6.1 High Voltage Step-Start (Figure 4-9)
The step-start circuit is used to protect the high voltage circuits from damage by high inrush currents. The step-start circuit inserts resistance in series with the high voltage transformer primary on initial voltage application. It then bypasses the resistance after 200 milliseconds.

When the HIGH VOLTAGE ON button is pressed, a relay latches the HIGH VOLTAGE ON button. Another relay connects the high voltage transformer primary to the line through a series of resistors. When a time delay relay (TD1) closes 200 milliseconds later, it energizes another relay which bypasses the series resistors. This time delay relay also closes a set of contacts used to power the optional high voltage warning light at the tank.

4.6.2 Electron Gun Control Primary Power
The electron-gun controllers are also provided with an interlock system which includes the interlocks at the vacuum tank (VACuum TANK in place, VACuum GAUGE, GUN cooling WATER, and AUXILIARY), and the beam position (FOCUS) interlock. Since the high voltage relays are also controlled by the electron-gun controllers, neither filament power nor high voltage can be applied to the electron beam gun unless all of the interlocks are closed.

For different modes of operation, some parts of the electron-gun controller interlock system are bypassed by relays controlled by the MODE switch. This allows the operation of more than one gun in a single vacuum chamber by satisfying the vacuum interlocks of the additional guns.

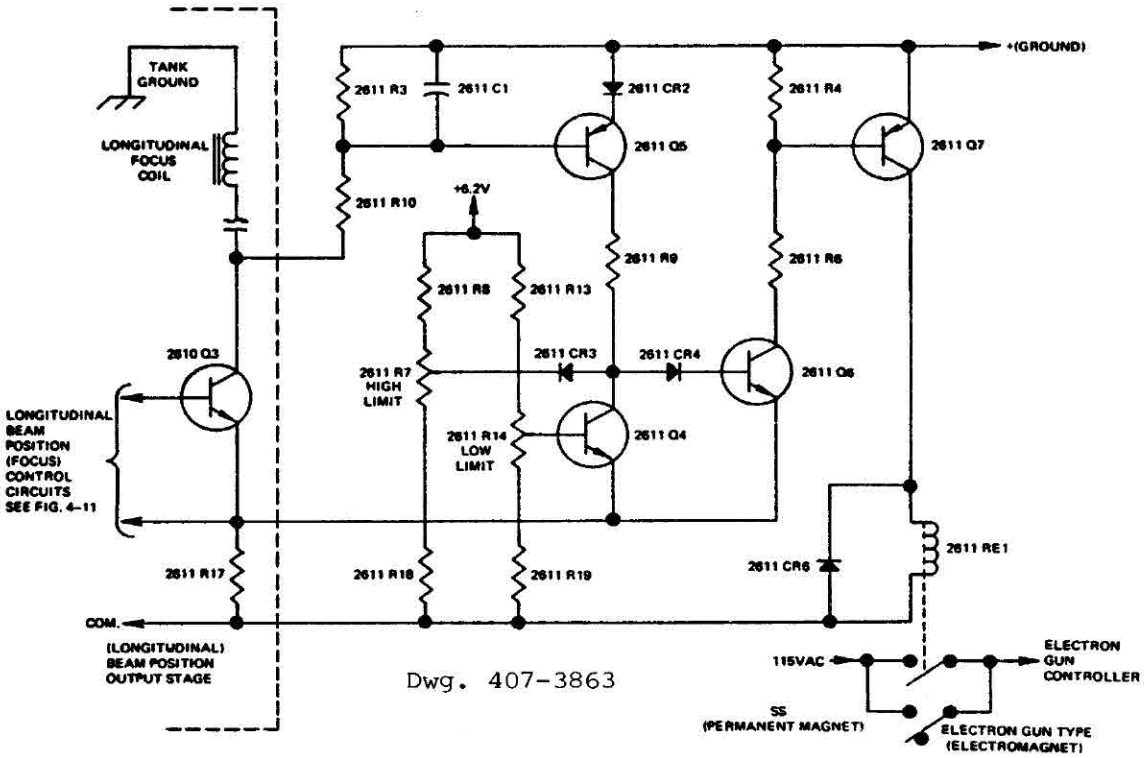

Figure 4-13. CV-14 A and B beam position focus interlocks

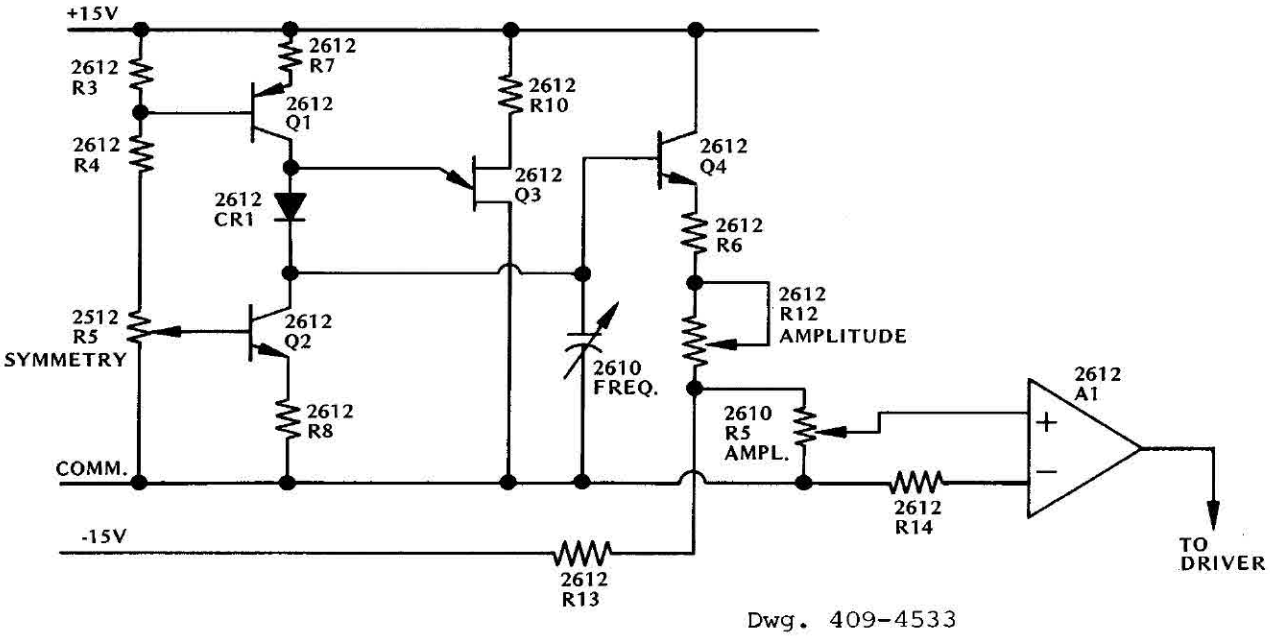

Figure 4-14. CV-14 A and B sweep generator

The output of A1 is connected to Q7 through a voltage level shifting network zero adjust, R39, R16, and CR2. Q7 drives the complementary symmetry output amplifier. The BEAM POSITION control is a front panel control for the lateral and longitudinal sweep supply, but is also a service adjustment for the longitudinal sweep supply. The longitudinal beam position can also be controlled by the BEAM POSITION control, discussed in the Beam Position Focus Control section.

4.5.1 Lateral Sweep Output (Figure 4-15)
Q5, Q6, Q8, Q9, Q1, and Q2 form a complementary symmetry power amplifier which drives the lateral focus coil through transient suppressor Z20. The average current is measured across R1 with the meter calibrating resistors R20 and R22 located on the longitudinal focus board. To prevent ground loops, the lateral focus coil common (return) lead should not be grounded externally.

4.5.2 Longitudinal Sweep Output
Since the longitudinal sweep amplifier only has to drive the longitudinal focus board, the high power output transistors Q6 and Q9 are eliminated from this section and from figure 4-15. The longitudinal sweep amplifier drives the input to the focus board through 2640SW8 and 2640R1, the BEAM POSITION control.

4.6 PRIMARY POWER (Figures 4-16 and 4-17)
The three-phase input is applied to the main 70A [50A] circuit breaker. Power from the circuit breaker is applied to the control transformer, to the high voltage step-start panel, and through a 5A circuit breaker to the longitudinal focus and electron gun controller power supplies. The control transformer output is connected directly to the main 15A circuit breaker which in turn feeds the other primary power circuit breakers.

The control 15A circuit breaker is in series with the primary interlocks. The water flow interlock must be satisfied to energize the relay to apply power to the triode filament, the triode cooling fan, and the triode bias and high voltage regulator power supplies.

The control power interlocks are all local. That is, they can be satisfied without a vacuum tank or electron beam gun in the system. The control power interlocks will not allow the high voltage to be turned on unless triode cooling water and air are present in the required amount, and unless the removable panels and printed circuit boards are in place. The front panel keylock switch must also be turned on. Front panel indicator lights show which interlocks are closed.

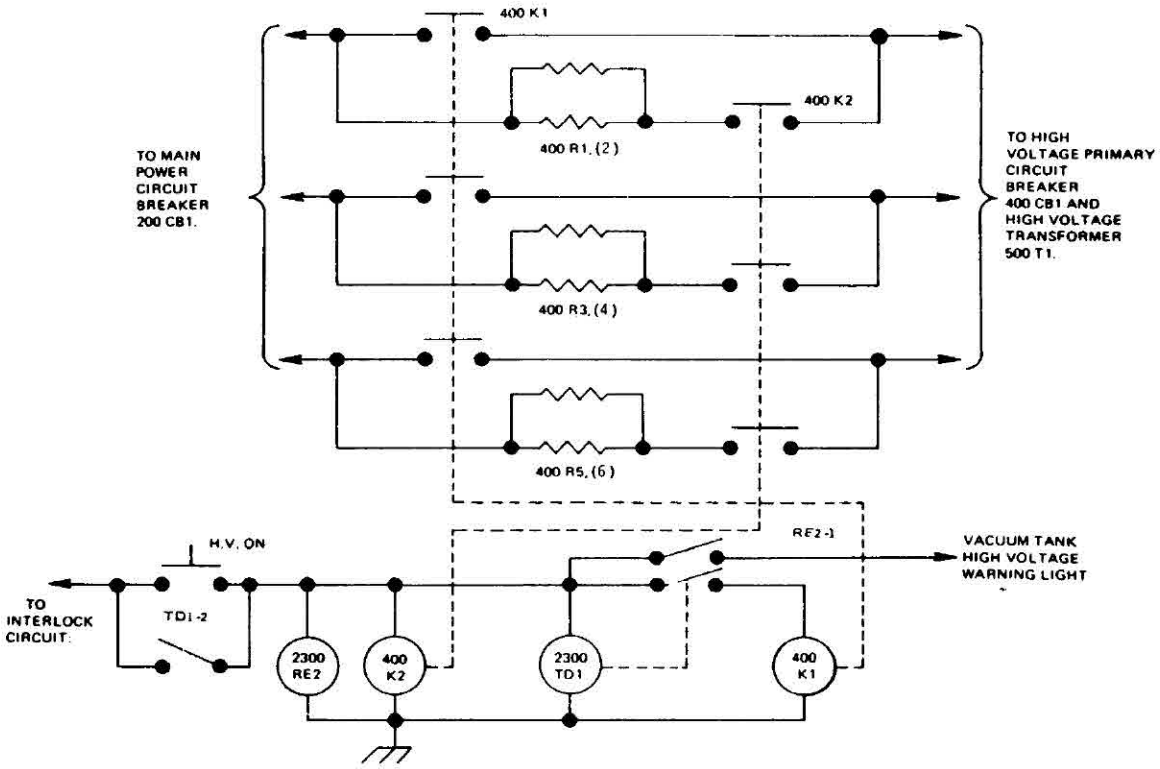

Figure 4-9. CV-14 A and B high voltage step start

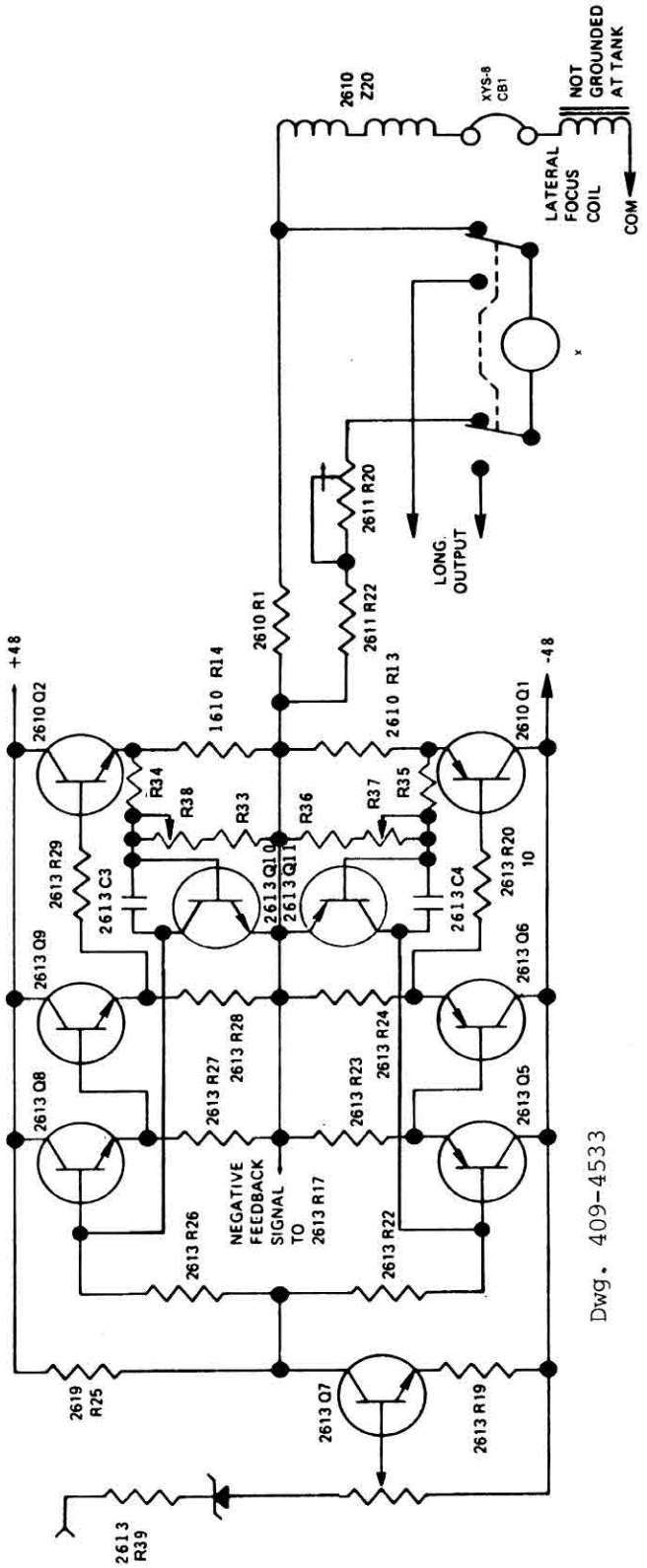

Dwg. 409-4533

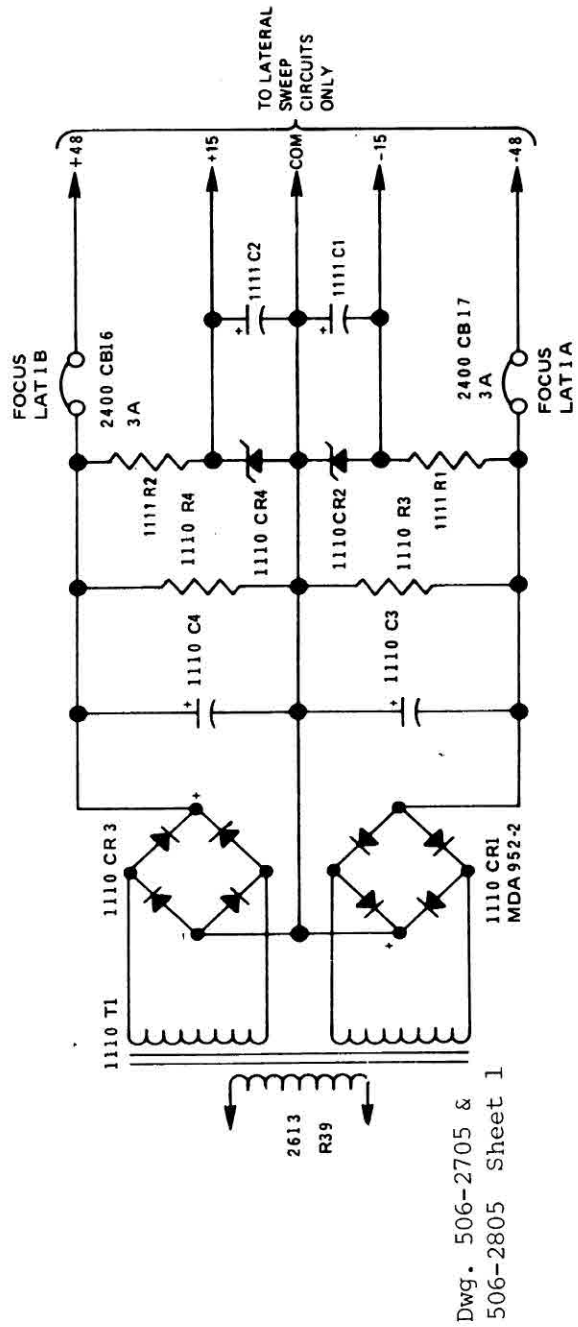

Dwg. 506-2705 &
506-2805 Sheet 1

Figure 4-15. CV-14 A and B lateral sweep output, lateral sweep power supply

4.6.1 High Voltage Step-Start (Figure 4-18)
The step-start circuit is used to protect the high voltage circuits from damage by high inrush currents. The step-start circuit inserts resistance in series with the high voltage transformer primary on initial voltage application. It then bypasses the resistance after 200 milliseconds.

When the HIGH VOLTAGE ON button is pressed, a relay latches the HIGH VOLTAGE ON button. Another relay connects the high voltage transformer primary to the line through a series of resistors. When a time delay relay (TD1) closes 200 milliseconds later, it energizes another relay which bypasses the series resistors. This time delay relay also closes a set of contacts used to power the optional high voltage warning light at the tank.

4.6.2 Electron Gun Control Primary Power (Figure 4-19)
The electron-gun controllers are also provided with an interlock system which includes the interlocks at the vacuum tank (VACuum TANK in place, VACuum GAUGE, GUN cooling WATER, and AUXILIARY), and the beam position (FOCUS) interlock. Since the high voltage relays are also controlled by the electron-gun controllers, neither filament power nor high voltage can be applied to the electron beam gun unless all of the interlocks are closed.

For different modes of operation, some parts of the electron-gun controller interlock system are bypassed by relays controlled by the MODE switch. This allows the operation of more than one gun in a single vacuum chamber by satisfying the vacuum interlocks of the additional guns.

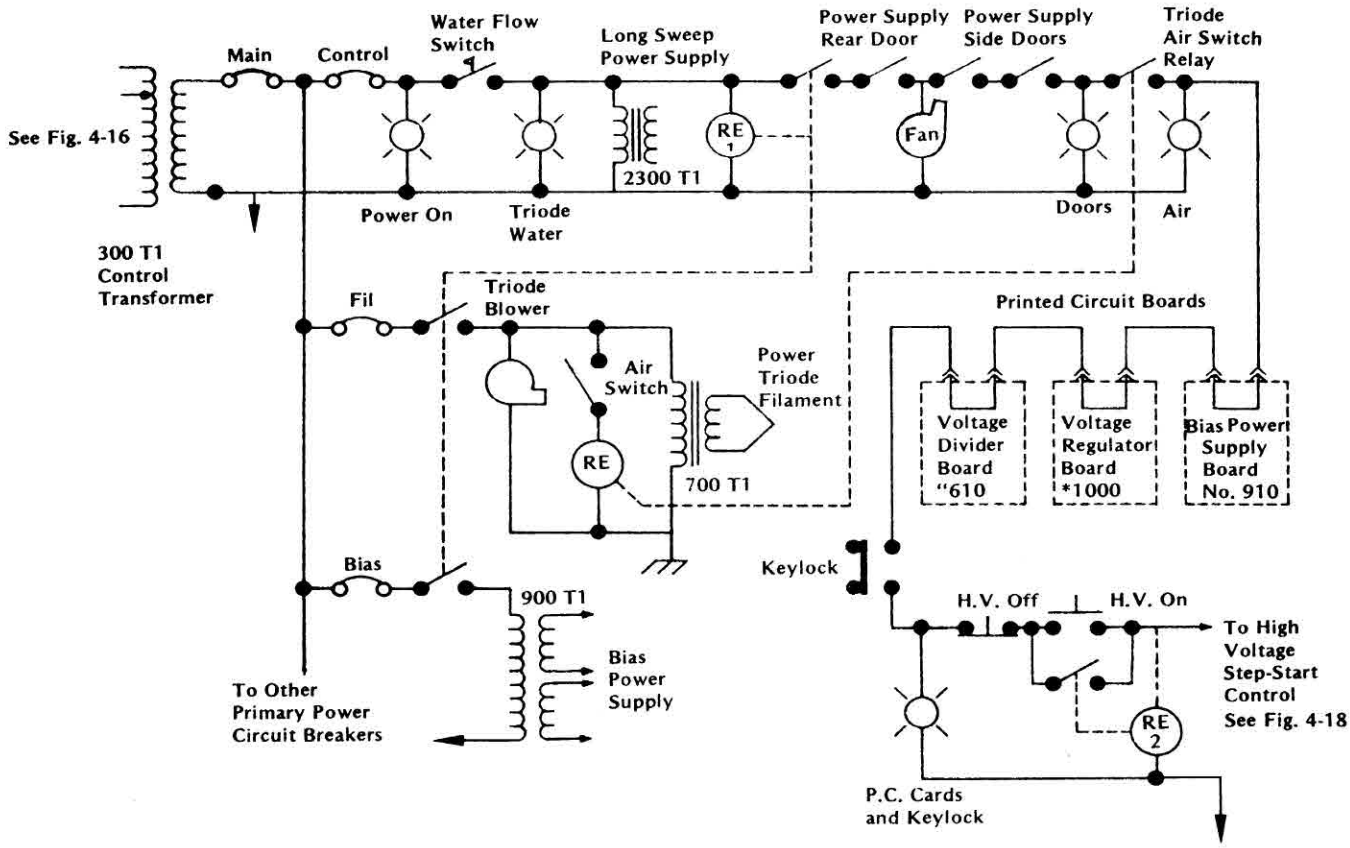

Figure 4-17. CV-14 A and B high voltage control interlocks

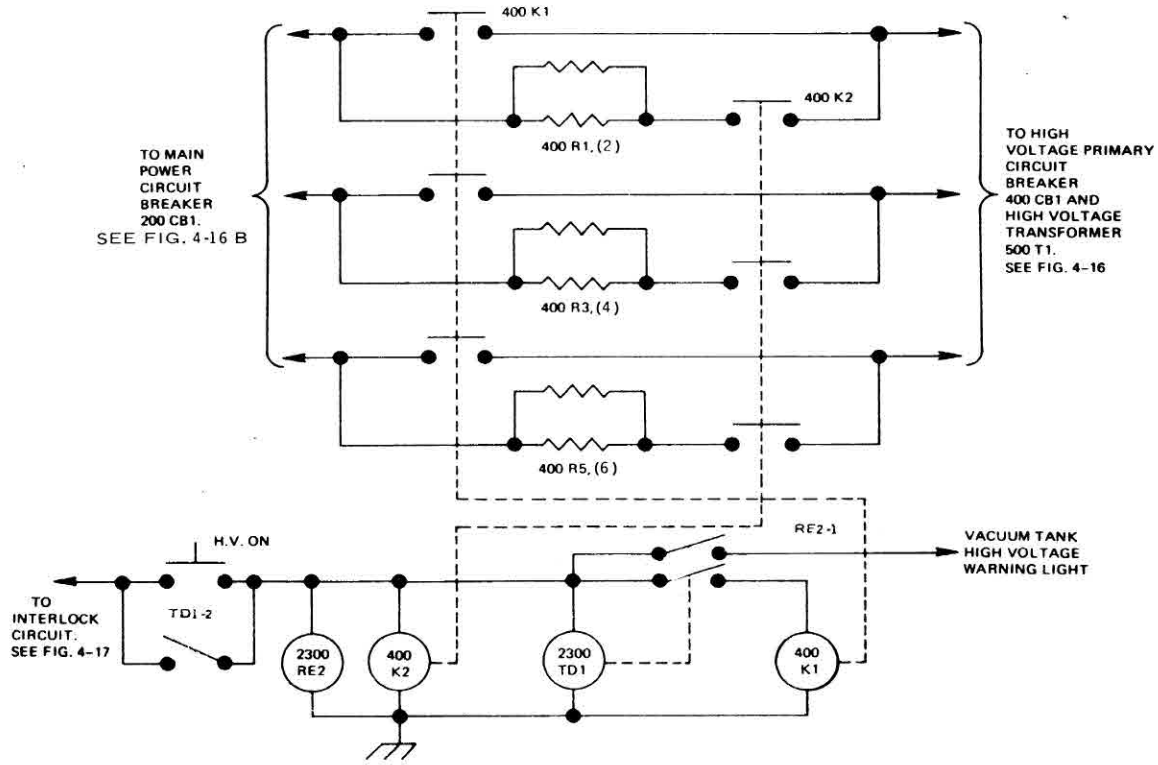

Figure 4-18. CV-14 A and B high voltage step start

SECTION 5

MAINTENANCE

5.1 PREVENTIVE MAINTENANCE

The CV-14 A and B power supplies require little periodic service. The only maintenance required is cleaning. The air filter located at the rear of the power supply module should be checked for dirt every thirty days and should be cleaned or replaced if necessary. At the same time, make a visual inspection of the interiors of the modules. If there is an accumulation of dust, dirt, or grease it should be removed by vacuuming or by washing with a solvent.

CAUTION

Read the high voltage warnings at the front of the manual before opening the enclosures.

5.1.1 Voltage Changeover (Figure 5-1)

Taps are provided for either 208/220/240V alternating current [360/380/415V alternating current] on all transformers operated directly from the input power line. To change the voltage requirements of the power supply:

a) Disconnect the service power to the power supply.
b) Remove the power supply module front panel.
c) Reconnect the four links located on the high voltage transformer to the desired voltage.
d) Reconnect the jumper from 400TS8 to either 400TS7 for 208V [360V] or 400TS9 for 220 and 240V [380 and 415V].

NOTE

400TS is the terminal strip located under the auxiliary circuit breakers.

e) Replace the front panel and reconnect the service power.
f) For 50 hertz operation, adjust the variable resistor R5-20Ω, 50W, located in the high voltage control, section 2300, until the voltage between terminal TS1-1 and 3, section 400, is about 100V.

WARNING

High voltage is present at all times. Only a qualified technician should perform this task.

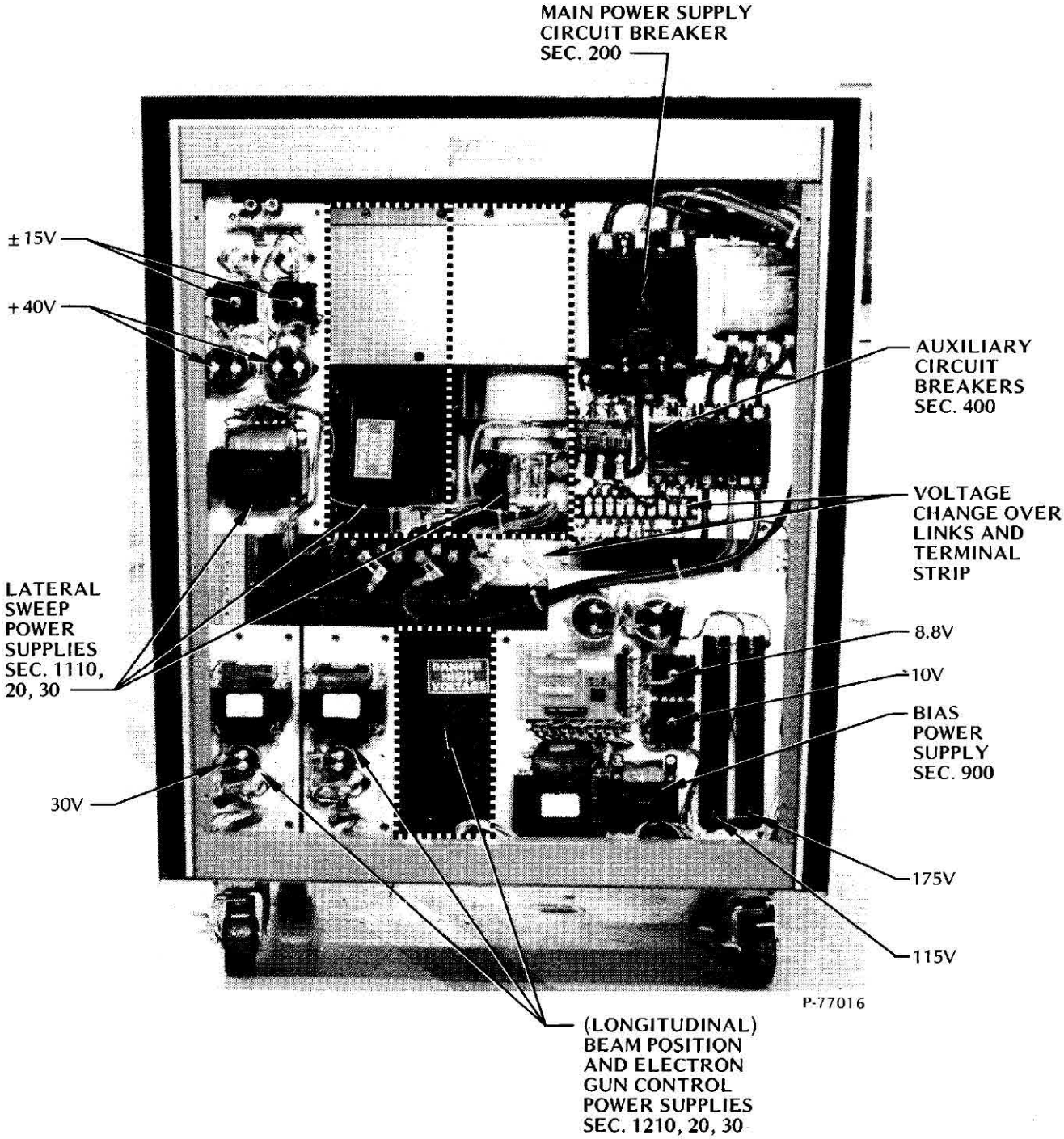

Figure 5-1. CV-14 A and B power supply module front view

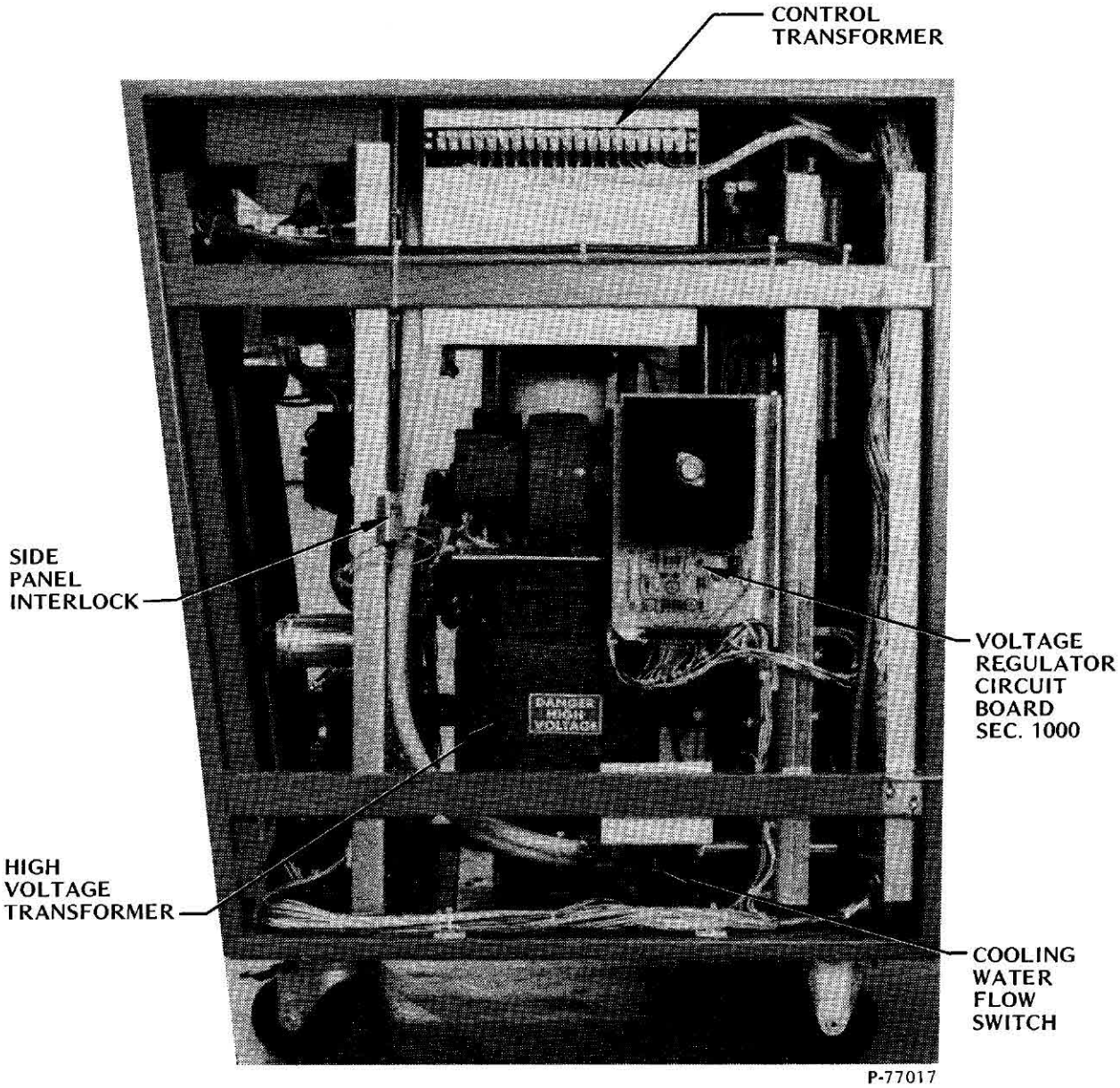

Figure 5-2. CV-14 A and B power supply module side view

5.2 SERVICE ADJUSTMENTS

IMPORTANT
The current limit adjust, 1000 R6, is factory adjusted and should not be tampered with. If adjustment is necessary, consult the factory.

All other variable components may be adjusted if necessary. However, these components are carefully set at the factory and should not be tampered with unless it is certain that these adjustments are at fault.

5.2.1 Power Supply Adjustments

a) High limit Voltage Adjust, 1000 R1:

CAUTION
High voltage will be present in the enclosure during this adjustment.

1) Turn the VOLTAGE ADJUST control fully clockwise (maximum).
2) Turn on the high voltage.
3) Adjust 1000 R1 for a reading of 10.2 kV on the high voltage meter.
4) Due to interaction, check the low limit adjustment described below.

b) Low Limit Voltage Adjust, 1000 R2:

CAUTION
High voltage will be present in the enclosure during this adjustment.

1) Turn the VOLTAGE ADJUST control fully counter-clockwise (minimum).
2) Turn on the high voltage.
3) Adjust 1000 R2 for a reading of 1.2 kV on the high voltage meter. Inability to reach 1.2 kV indicates impure cooling water.
4) Due to interaction, check the high limit adjustment described above.

c) Current Limit Adjust, 1000 R6: Factory adjustment only.

d) Low Current Limit Adjust, 2300 R3:

WARNING
THE FOLLOWING ADJUSTMENT DELIVERS OVER 10 kW TO THE CRUCIBLE. USE EXTREME CAUTION TO PREVENT DAMAGE TO THE ELECTRON BEAM GUN.

1) Turn 2300 R3 fully counterclockwise (minimum).
2) Adjust the high voltage for 10 kilovolt.
3) Turn the CURRENT LIMIT (front panel) control fully clockwise (maximum).
4) Select a single gun controller that is connected to an operable vacuum system and turn the EMISSION CURRENT control fully counterclockwise (minimum).
5) Turn the filament ON and slowly advance the emission current until current limiting starts. When this point is reached, the high voltage will decrease but the emission current will stay relatively constant. During this adjustment, observe the beam and adjust its position if necessary.
6) Turn 2300 R3 clockwise until current limiting starts a 1.3A emission current.

CAUTION
Do not proceed with this adjustment unless current limiting is observed.

7) Turn the main power OFF. Short the high voltage to ground either in the power supply or at the vacuum tank. Turn the EMISSION CURRENT control fully counterclockwise (minimum).
8) Turn the main power and high voltage ON. If the high voltage is shorted at the tank or on the output side of the high voltage relay, turn the filament ON. The high voltage meter should read about 1.1 amperes.
9) Adjust 2300 R3 for 1.5A emission current.
10) Turn off the main power and remove the short installed in step 7.

5.2.2 Electron Gun Control Adjustments

a) Emission Current Meter Full Scale Adjust 2512 R13, 2522 R13, 2532 R13, and Transductor Zero Adjust 2512 R4, 2522 R4, 2532 R4.

DANGER
DURING THIS ADJUSTMENT, EMISSION CURRENT WILL BE MEASURED BY THE VOLTAGE ACROSS THE CURRENT SENSE RESISTORS 610 R14. DO NOT ATTEMPT TO PUT A METER IN SERIES WITH THE HIGH VOLTAGE CABLE.

1) Turn off the power, remove card 610 from its socket and measure the resistance across 610 R14. It should be 1.25 ohms.
2) Replace the card in its socket and connect a voltmeter across 610 R14. Set the meter scale to read 2 volts. Adjust the emission meter mechanical zero.

DANGER
Do not touch the meter when the power is on.

3) Turn on the power supply and the high voltage. The FILAMENT OFF (ready) light should be on.
4) Adjust the transductor zero adjust for a zero reading on the emission current meter.

WARNING
THE FOLLOWING ADJUSTMENT DELIVERS OVER 10 kW TO THE CRUCIBLE. USE EXTREME CAUTION TO PREVENT DAMAGE TO THE ELECTRON BEAM GUN.

5) Turn the filament on. Adjust the EMISSION CURRENT for a reading of 1.87V on the voltmeter connected across the current sense resistors.
6) Adjust the emission current meter full scale. Adjust for a reading of 1.5A on the emission current meter.
7) Turn the filament OFF and recheck the zero setting.
8) Turn off the power supply and remove the meter.

b) Transductor Range Adjust 2511 R29, 2521, R29 2531 R29:

WARNING
THE FOLLOWING ADJUSTMENT DELIVERS OVER 10 kW TO THE CRUCIBLE. USE EXTREME CAUTION TO PREVENT DAMAGE TO THE ELECTRON BEAM GUN.

1) Turn on the power supply, high voltage, and filament.
2) Adjust the high voltage for 10 kilovolts.
3) Turn the EMISSION CURRENT control fully clockwise (maximum).
4) Adjust the transductor range for a reading of 1.5 amperes on the emission current meter.

c) High Voltage Trip Point Adjust 2511 R31, 2521 R31, 2531 R31: Factory adjustment only.

d) Silicon controlled rectifier bias 2511 R4, 2521 R4, 2531 R4: Adjust the silicon controlled rectifier bias as outlined in section 3. Perform the following adjustments only if the above setting gives unsatisfactory results.
1) Turn on the power supply, high voltage, and filament. Turn the EMISSION CURRENT control fully counterclockwise (minimum).
2) Adjust the silicon controlled rectifier bias until there is a slight reading on the emission current meter.
3) Back off the silicon controlled rectifier bias just until the emission current meter reads zero. The desired bias point is just under emitting termperature.
4) Check the filament current meter.

e) Filament Current Meter Adjust 2511 R26, 2521 R26, 2531 R26:
   1) Adjust the silicon controlled rectifier bias as outlined above.
   2) Press the meter switch and adjust the filament current meter adjust so that the meter reads on the lower green line. The EMISSION CURRENT control must be at the minimum setting.

5.2.3 Beam Position Control Adjustments (Figure 5-5)

a) Longitudinal Focus Current Meter Adjust:
   1) With the main power off, adjust the current meter mechanical zero.
   2) Connect a 5A direct current ammeter in series with the longitudinal focus coil lead.
   3) Turn on the power supply. Leave the high voltage and filament OFF.
   4) Adjust the longitudinal beam position for a reading of 3A on the direct current ammeter.
   5) Adjust the current meter adjustment for a reading of 3A on the current meter.
   6) Vary the beam position control and check that the two meters track.
   7) Check the interlock adjustments.

b) Interlock High and Low Limit 2611 R7, 2621 R7, 2631 R7, 2611 R14, 2631 R14:
   1) Check the longitudinal focus current meter adjustment above.
   2) Adjust the interlock high limit so that the FOCUS indicator on the electron gun controller turns off between 3 and 3.1A of focus current.
   3) Adjust the interlock low limit so that the FOCUS indicator turns off between 0.5 and 0.6A of focus current.
   4) Check the high and low limits again.
   5) Turn OFF the power supply and disconnect the direct current ammeter from the focus coil lead.

5.2.4 Sweep Adjustments (Figure 5-5)

a) Symmetry Adjust 2612 R5, 2613 R5, 2622 R5, 2623 R5, 2632 R5, 2633 R5:
   1) Connect an oscilloscope to the top (cathode) end of CR1 (located next to the symmetry adjust trimmer potentiometer). Ground the oscilloscope to the chassis.
   2) Turn the power supply ON but leave the high voltage OFF.
   3) Adjust the symmetry adjust control for a symmetrical waveform on the oscilloscope. When the waveform is symmetrical, peak to peak voltage will be approximately 5V direct current.
   4) Turn OFF the power supply and disconnect the oscilloscope.

b) Longitudinal Sweep Zero 2612 R39, 2623 R39, 2633 R39: Factory adjustment only.
c) Lateral Sweep Zero 2613 R39, 2623 R39, 2633 R39:
   1) Adjust the mechanical zero of the focus current meter with the power supply OFF.
   2) Turn the power supply ON but leave the high voltage and filament OFF.
   3) Turn the LATERAL BEAM POSITION control to its midpoint.
   4) Adjust the lateral sweep zero for a zero reading on the focus current meter.
d) Lateral Focus Current Meter Adjust 2611 R20, 2621 R20, 2631 R20:
   1) With the power supply off, insert a 5A direct current ammeter in series with the lateral focus coil. Also, check the focus current meter mechanical zero adjustment.
   2) Turn the power supply ON but leave the high voltage and filament OFF.
   3) Adjust the LATERAL BEAM POSITION control for a reading of 3A on the direct current ammeter. Keep the SWEEP control fully counterclockwise.
   4) Adjust the lateral focus current meter adjust for a reading of 3A on the focus current meter.
   5) Turn off the power supply and remove the direct current ammeter from the lateral focus coil line.
e) Longitudinal Position Amplitude 2610 R4, 2620 R4, 2630 R4:
   1) Turn the power supply ON, but leave the high voltage and filament OFF.
   2) Turn the longitudinal SWEEP control fully counter-clockwise (minimum).
   3) Put the position-sweep switch in the UP position.
   4) Adjust the LONGitudinal POSITION control for a normal reading on the focus current meter (about 1.5A).
   5) Put the position-sweep switch in the DOWN position. Adjust the position amplitude for the same reading on the focus current meter as in step 4.
   6) Switch the position-sweep switch between the two positions. There should be no change in the focus current.
   7) Return the position-sweep switch to the desired position.
f) Positive Current Output Clamp R34: R34 sets the current level at which the circuit goes into a current limiting mode in the positive direction. It should be adjusted so that maximum output is limited to +2.5 to 3A direct current. R34 works only on positive lateral output.
g) Negative Current Output Clamp 35: Works the same as R34 but only in the negative half of the output waveform. Clamps longitudinal and lateral output.

5.3 SUBASSEMBLIES, GENERAL DESCRIPTION BY SECTION NUMBER

Section 100:	Service panel
Section 200:	Main circuit breaker
Section 300:	Control transformer
Section 400:	Step-start panel
Section 500:	High voltage transformer
Section 600:	High voltage rectifier panel
Section 700:	Triode plate
Section 800:	Water load
Section 900:	Bias power supply
Section 1000:	Regulator
Section 1100:	Lateral (Y) focus
Section 1200:	Longitudinal (X) focus
Section 1300:	Not used
Section 1400:	Door interlock and fan
Section 1500:	All cables between power supply and vacuum system and all cables between control rack and power supply
Section 1600:	Not used
Section 1700:	Power supply remote panel
Section 1800:	Not used
Section 1900:	Not used
Section 2000:	Not used
Section 2100:	Control cabinet panels
Section 2200:	Test panels
Section 2300:	High voltage control panel
Section 2400:	Circuit breaker panel
Section 2500:	Gun controllers
Section 2600:	Sweep focus power supply
Section 2700:	Beam position focus power supplies

5.4 GENERAL TROUBLESHOOTING INFORMATION

IMPORTANT

Read the high voltage safety precautions at the front of this manual.

Troubleshooting the CV-14 A and B power supplies should be performed in a systematic manner. Use the block diagrams, figure 4-8, to help locate the difficulty. Section 4 should be studied to obtain a clear picture of the circuit operation before troubleshooting individual circuits. Most plugs and jack connections are easily accessible and at convenient locations.

In the event of an apparent primary power malfunction, always check the interlock lights on the control module first. If one or more lights are out, check the interlock indicated by the top unlit indicator. For example, if the DOORS, AIR, and PC CARDS & KEYLOCK lights are off,

but the other lights are on, check the side and rear panels of the power supply module for proper installation. The succeeding interlock indicators will not be energized until the DOORS interlock is satisfied. Also check the circuit breaker panel for open circuit breakers.

If a circuit breaker is open, reset it and proceed with normal operation. In a high power system, transients can trip circuit breakers even if there is no actual malfunction. Assume there is trouble only if the circuit breaker will not stay closed after three tries.

Another frequently overlooked source of trouble is the electron beam gun installation. Excessive arcing, loose connections, cracked or fouled insulators, and poor grounding all cause apparent power supply problems. If a high voltage problem develops, check the physical appearance of the feedthrough insulators. Also check for tight connections with the high voltage off.

5.5 TROUBLESHOOTING CHART, MAJOR CIRCUITS

5.5.1 High Voltage Control Troubles

Symptom	Possible Cause	Remedy
1) All lights out	1) Service power; MAIN POWER CIRCUIT BREAKER module interconnecting cables; main control circuit breaker.	1) Reset circuit breakers CB1, section 200, CB2, section 400, and CB1 in the control console.
2) Some interlock indicator lights out	2) Interlock indicated by top unlit light	2) The first interlock light in the control circuit which is not lit indicates that the interlock is not complete.
3) H.V. OFF control ready light will not light when all the high voltage interlock lights are ON	3) H.V. OFF control SW1, keylock are defective	3) Replace SW1 or keylock switch. These units can be tested with an ohmmeter providing all power is removed from the circuit.
4) H.V. ON indicator will not come on or will not stay on. Ready light on	4) High voltage control latching relay RE2; H.V. ON control SW2	4) Check RE2 or SW2 located in high voltage control chassis with power off, using an ohmmeter.
5) H.V. ON indicator illuminates but the high voltage meter indicates zero or near zero. Emission ammeter reads zero	5) High voltage power supply circuit breaker CB1; high voltage power supply circuit; voltage divider circuit R10; section 600, K2, K4, or K6 contacts welded in the closed position.	5) Circuit breaker CB1, section 400, is tripped. R6, section 600, is open. High voltage meter is bad. R10, section 600, is open. Contactors K1 and K2, section 400, are not operating. Replace section 600, K2, K4, or K6.
6) H.V. ON indicator illuminates but high voltage meter reads zero. Emission ammeter reads 1.4A.	6) Shorted or fouled vacuum tank insulators; shorted high voltage cable; short in emitter assembly of gun	6) Disconnect filament leads from the secondary of the filament transformer for the electron beam gun. Make sure that they can't touch ground or filament transformer. Then, turn on the high voltage. This will test the entire power supply and high voltage cable. If the voltage is clear, there is a short somewhere inside the tank.
7) FIL. ON, but no high voltage at gun; meter readings normal	7) Open high voltage cable; broken high voltage connection; resistor R17 in section 600 open.	7) Replace R17. Inspect both ends of high voltage cable

Symptom	Possible Cause	Remedy
8) No high voltage regulation; or high voltage is low	8) Voltage regulator circuit; power triode circuit; bias power supply; caused by poor system ground	8) Q5, section 1000, shorted. Check the filament leads on the tube socket for triode tube. Check the bias supply voltages 185V, 10V, 8.8V, on section 900
9) No high voltage regulation; voltage output high	9) Shorted power triode; voltage regulator circuit; voltage divider circuits; bias power supply; high voltage power supply	9) Voltage divider R7, section 600, is open. Zener diode CR7 or CR8, section 900, open. Grid is shorted to the cathode inside triode tube. The grid connection to tube is open. Zener diodes CR7, CR8, CR9 are shorted. Filament leads to the tube are loose or oxidized.
10) MAIN POWER CIRCUIT BREAKER or high voltage circuit breaker trips repeatedly	10) Voltage regulator (current control) circuits; high voltage power supply	10) Triode tube is shorted internally. Q5, section 1000, is bad. High voltage leads on section 500 or 600 are arcing to ground.
	10A) Door(s) open or ajar	10A) Shunt trip breaker trips if any doors are open. Close door(s).
11) Minimum high voltage too high; otherwise normal	11) Poor quality cooling water	11) To check conductivity of water: a) Turn off main power; b) disconnect one wire from primary of triode tube filament transformer, section 700; c) turn on high voltage. Reading on high voltage meter will indicate quality of water. This reading must be at least 1500V lower than the desired operating voltage. Use city water or install closed-loop recirculating system using de-ionized water.
12) Arcing inside power supply	12) Condensation on power triode (sweating)	12) Install solenoid valve; see Section 2, Installation.

5.5.2 Emission Control Troubles

Symptom	Possible Cause	Remedy
1) FIL. OFF (ready) light will not illuminate; all GUN CONTROL interlock lights on.	1) FIL. OFF control (SW1)	1) Replace SW1 in control console
2) FIL. ON will not light or will not stay on. Ready light on.	2) FIL. ON control (SW2); filament control latching relay (RE1)	2) Replace SW2 or RE1 in control console
3) No emission current; filament dark; no indication on filament current meter; FIL. ON light on	3) Open filament or connecting wires; filament transformer or connections, SCR's or driver circuits; GUN CONTROL power supply circuit breakers (CB6 and CB7, CB8 and CB9, CB10 and CB11); GUN CONTROL power supply, section 1210, 1220	3) Replace filament. Check connections from filament transformer to gun. Check for 40V ac coming from section 1210, 1220, or 1230. Replace Q1, Q2, or Q7 on gun control PC board
4) No emission current; filament dark; high current indication on filament current meter	4) Shorted filament or connecting wires; filament transformer; high voltage cable	4) Check filament, cathode blocks, beam former and its insulator for a shorting condition
5) No emission current indication; filament lit but no visible beam; filament current meter indication normal	5a) No high voltage at tank	5a) Section 600, R17, open; replace.
	5b) Gun control circuits	5b) On gun control PC board; Q6 or Q4 bad. If in local control, Zener diode CR10 bad or emission control potentiometer bad. In remote control, check output of rate controller.
	5c) LOCAL/REMOTE switches in wrong position	5c) Check local/remote switches in section 2400
	5d) Voltage divider circuit R10, section 600	5d) Voltage divider R10 is open, section 600.
	5e) High voltage relays not energizing	5e) Check 40V power supply in section 2400.
6) Poor or no emission current regulation; current in normal range	6a) SCR bias adjusted too high	6a) Refer to paragraph 5.2.2,d for proper bias adjustment. The gun filament could be installed backwards.

Symptom	Possible Cause	Remedy
	6b) Transductor circuits	6b) If emission current jumps severely with only slight increase of current adjust control, transductor leads are open, Q1 and Q2 on transductor amplifier PC board are bad.
	6c) GUN CONTROL circuits	6c) If, when gun arcs, emission current jumps to maximum, Q6 on the gun control PC board is bad.
7) No emission current indication; visible beam	7a) Transductor circuits	7a) Check output of transductor amplifier PC board on Pin A. Voltage signal should be 0-6V (positive to ground), with 0-01.4A through transductor window.
	7b) Defective meter or switch	7b) SW3 or ME1 in GUN CONTROL chassis are bad; check with ohmmeter.
8) Emission current indication reversed or erratic	8) Transductor circuits	8) Check wiring on transductor. Refer to drawing 506-2705 [506-2805]. On the transductor amplifier PC board, check the diodes CR1, CR2, CR3, and CR4 with ohmmeter.
9) GUN CONTROL circuit breaker(s) trips	9a) Shorted SCR	9a) If filament lights, SCR's CR2/CR3 or CR5/CR6 are shorted, or are being turned full on. Remove the gun control PC board. If the filament ammeter pegs, replace one or both SCR's. If not, Q1, Q2, or Q7 on the PC board is bad.
	9b) Shorted filament	9b) If the filament stays dark, the filament or emitter assembly of the gun is shorting; the filament leads are breaking down
	9c) Filament transformer	9c) The windings of the filament transformer have shorted

5.5.3 Beam Position (Focus) Troubles

Symptom	Possible Cause	Remedy
1) Beam not centered laterally	1a) Gun out of alignment	1a) Read the section of the instruction manual on the electron beam gun filament, beam former, anode, or whole emitter assembly.
	1b) Magnetic interference from second gun	1b) If there is a second electron beam gun in the same vacuum chamber, consult Airco Temescal service department.
	1c) Shorted focus coil	1c) Check continuity of focus coils. Both the longitudinal and lateral coils should have infinite resistance in respect to each other, and to ground.
2) Beam cannot be located; all other conditions normal	2) Focus coil connections reversed; permanent magnet reversed. Permanent magnet very weak. Replace.	2) If it is a permanent magnet type gun, the permanent magnet is installed backwards. If not, the focus coil leads are reversed.
3) No current indication in the longitudinal coil	3a) Circuit breakers (CB12, CB13, CB14)	3a) Reset circuit breakers CB12, CB13, or CB14.
	3b) Beam position power supply, section 1210, 1220, or 1230	3b) Check for 30V coming from section 1210, 1220 or 1230.
	3c) Open focus coil or connections	3c) Check the continuity of the focus coil. Resistance should be nominally 1.8Ω. The coil should not be grounded internally, nor should it have continuity with the lateral coil.
	3d) Beam position circuits; poor tank ground connection	3d) NORMAL/XYS switch SW8/SW9 in wrong position. On the longitudinal focus PC board, Q1, Q2, or Q3 is bad.
4) GUN FOCUS interlock off	4a) Shorted or open focus coil or connections	4a) Check the focus coil as explained in previous symptom.

Symptom	Possible Cause	Remedy
	4b) Beam position interlock circuit; beam position maladjusted	4b) On the longitudinal focus PC board, Q6 is bad if the high limit is faulty; Q4 is bad if the low limit is faulty. If neither limit works, Q7 or RE1 is bad. Check the coil of RE1.
5) GUN FOCUS interlock will not turn off under normal conditions	5a) NORMAL-SS switch (section 2200, SW1, SW2, SW3) in wrong position	5a) Check the position of SW1, SW2, SW3.
	5b) BEAM POSITION interlock circuit	5b) Replace Q7 or RE1 on the longitudinal focus PC board.

5.5.4 Sweep Troubles

Symptom	Possible Cause	Remedy
1) No longitudinal sweep, position control normal	1a) Position-sweep switch, section 2610, 2620, 2630, in wrong position	1a) Check position of switches.
	1b) Longitudinal sweep power supply, section 2311, 2312, 2313	1b) Check the longitudinal sweep power supply, section 1110, 1120, for plus and for minus for both 48V and 15V.
	1c) Longitudinal sweep circuits	1c) Try the lateral sweep PC board in the longitudinal position. If this works, troubleshoot board from paragraph 5.5.4, symptom 3.
2) Longitudinal ammeter full scale, beam will not sweep	2a) Output transistor	2a) Q3, located in section 2600, shorted; may have been caused by focus coil leads getting too close to the high voltage filament leads
	2b) Sweep PC board	2b) On sweep PC board, check amplifier A1 (SQ-10A): Q7 (40343), Q8 (2N3498), Q9 (2N3441).

Symptom	Possible Cause	Remedy
3) No longitudinal sweep; beam position abnormal	3a) Longitudinal sweep circuits	3a) If the lateral sweep circuit is functioning properly, exchange PC boards to establish whether the problem lies in the PC board or not. If the circuit works normally using the lateral PC board, check the waveform generator Q1, Q2, Q3, and CR1, by looking from cathode of CR1 to ground with an oscilloscope. You should see a triangular waveform which measures approximately 5V, peak to peak. If there is no triangular waveform, replace Q1, Q2, or Q3. If the waveform is normal, look at the cathode of CR2 to ground. If the waveform is not there, replace A1. If the waveform is there, replace Q7.
	3b) Longitudinal sweep power supply (see beam position (focus) troubles)	3b) Check 30V coming from the longitudinal power supply in section 1210, 1220, or 1230. Check for plus and for minus for both 15V and 48V coming from section 2311, 2312, or 2313.
	3c) Focus coils	3c) Check continuity of focus coil at the feedthroughs. It should be nominally 1.8Ω referenced to ground.
4) Lateral ammeter pegs left, then right. CB1, CB2, CB3 on rear of sweep trip	4a) Output transistors	4a) Output transistors Q1 (2N3792), Q2 (2N3055), in the sweep chassis shorted.
	4b) Sweep PC board	4b) Q5 (2N3494), Q6 (2N3741), Q8 (2N3498), or Q9 (2N3441) on the sweep PC board shorted.

Symptom	Possible Cause	Remedy
5) No lateral sweep and/or position control	5a) Lateral focus coil or connections	5a) Check continuity of the lateral coil at the feed-through. Resistance should be nominally 2.8Ω. Coils should not be grounded inside the tank.
	5b) Lateral sweep circuits	5b) Check the waveform generator on the sweep PC board, Q1 (2N3251), Q2 (2N2925), and Q3 (2N1671). Check the circuit breakers, section 2400, CB15, CB16, CB17 for gun No. 1; CB18, CB19, CB20 for gun No. 2; CB21, CB22, CB23 for gun No. 3.
	5c) Lateral sweep power supply	5c) Check plus and minus 48V and plus and minus 15V in the sweep power supply, section 1110, 1120, 1130.
6) Beam spot size increases on sweep	6) Normal condition	

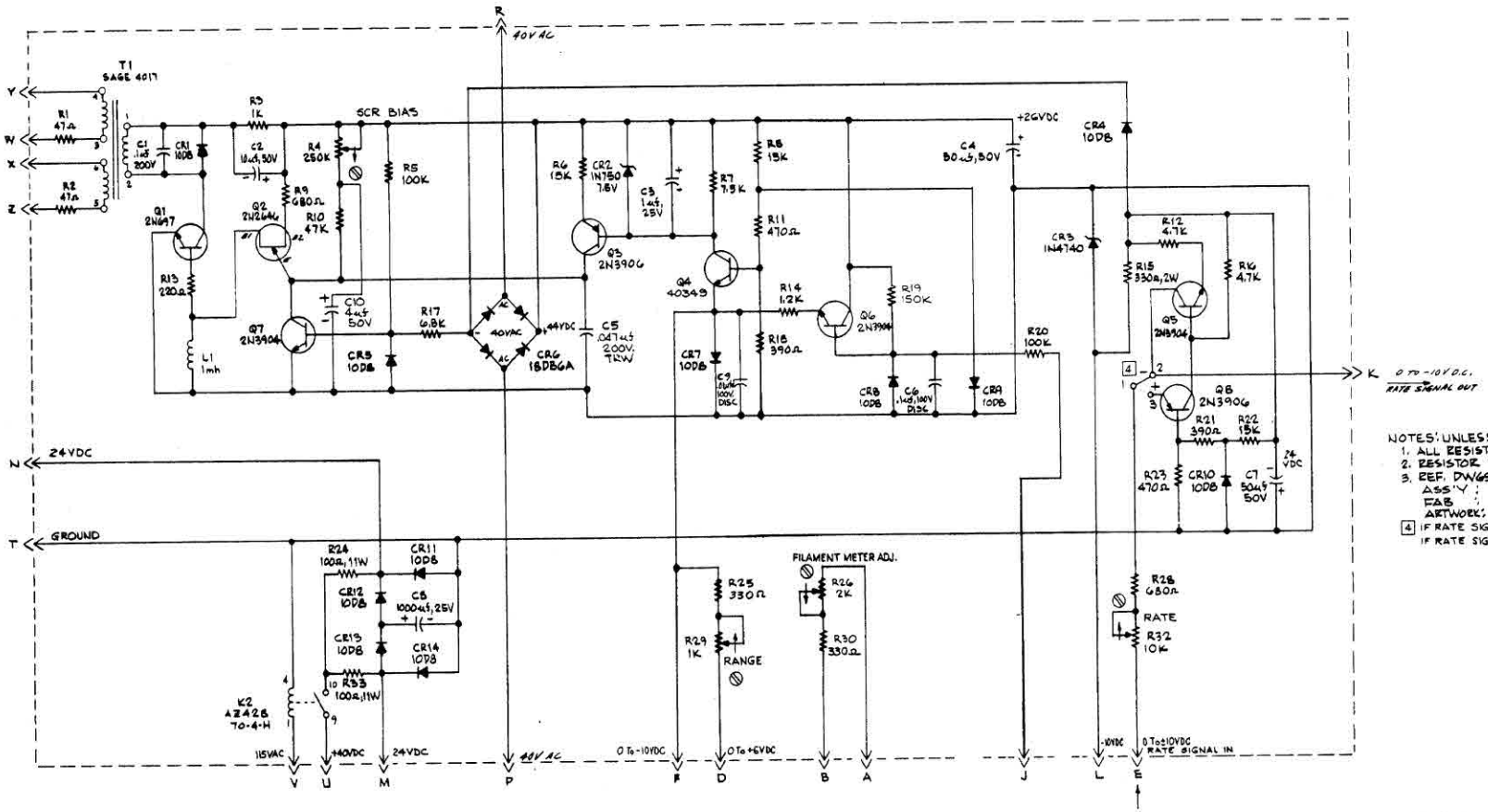

NOTES: UNLESS OTHERWISE SPECIFIED.
1. ALL RESISTORS ARE 1/2W, 5% CARB. COMP.
2. RESISTOR VALUES ARE IN OHMS.
3. REF. DWGS.
ASS'Y: 407-4063
FAB: 407-4053
ARTWORK: 407-4043
4 IF RATE SIGNAL IS POSITIVE, JUMPER 1 TO 3, IF RATE SIGNAL IS NEGATIVE, JUMPER 1 TO 2

REV.	DESCRIPTION	BY	DATE	APPROVED
F	R25 WAS 1KΩ / D.C.N 0318	V.L.B	10-23-80	
E	REVERSED POLARITY OF C2. TERM "J" WAS "C"	FG	8/13/73	
D	DELETED K1 & R31	FG	3/9/73	
C	GENERAL REVISION	FG	3/6/73	
B	DELETED R27, Q4 WAS 2N697, R30 WAS 1K, R32 WAS 5K, C9 WAS .1uf, ADDED VOLTAGES, E1 ADDED OPTIONS	EM	4-4-72	
A	ADDED C9, C10, GENERAL REVISION	FG	12/8/71	

DO NOT SCALE DRAWING
UNLESS OTHERWISE SPECIFIED

FINISH | TOLERANCE | MATL SPEC | SIZE OR SYMB | USED ON SYMB

BERKELEY AIRCO Temescal CALIFORNIA
A DIVISION OF AIR REDUCTION COMPANY, INCORPORATED

DRAWN BY F. GAMBLE 5-4-71 | CHK BY | APP BY E.Y. | SCALE

CV-14 POWER SUPPLY

GUN CONTROL P.C. CARD SCHEMATIC

407-4034 E

WARNING: MICRO FILM CHANGE CONTROL

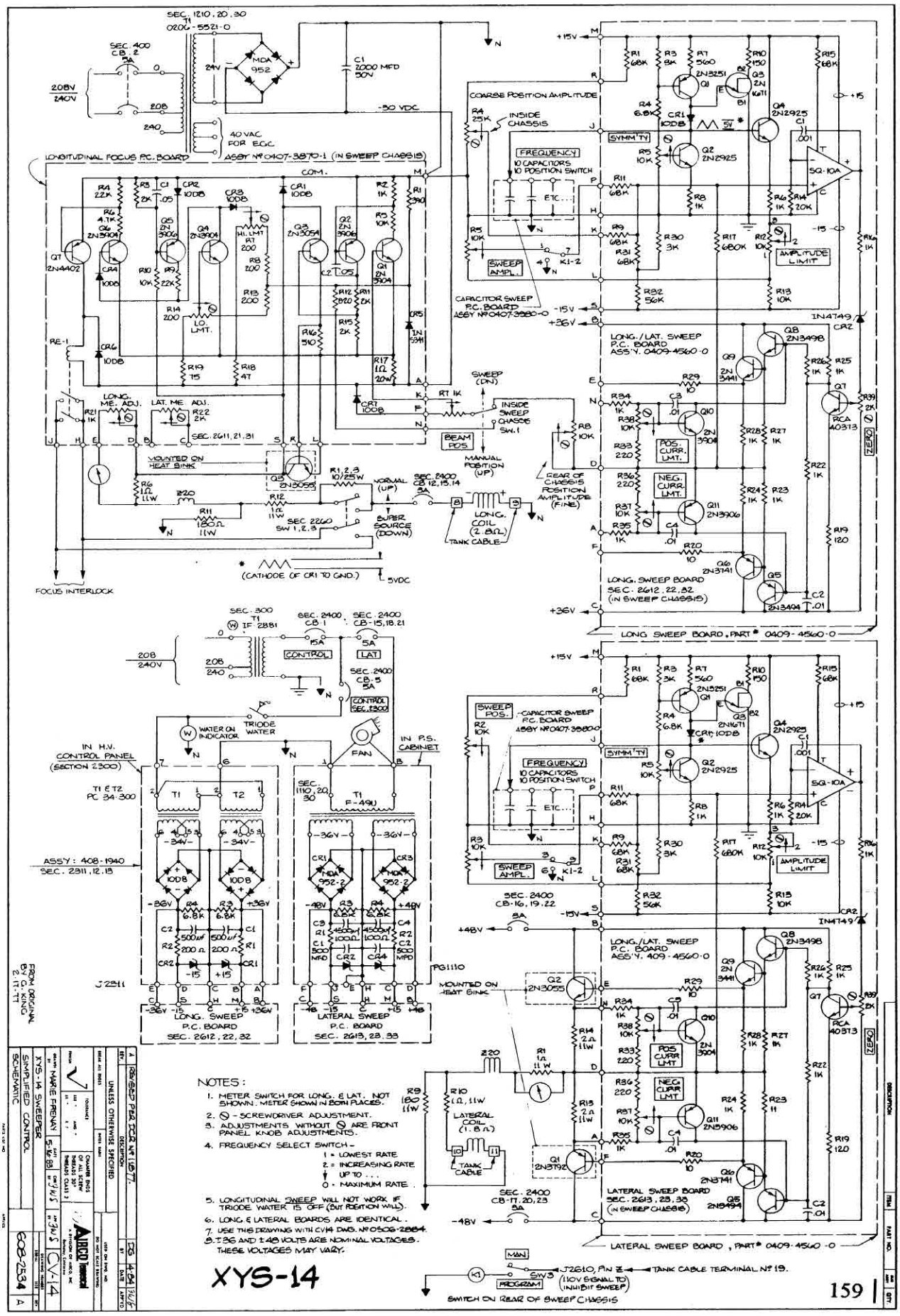

0101-8261-4

608-2534-A

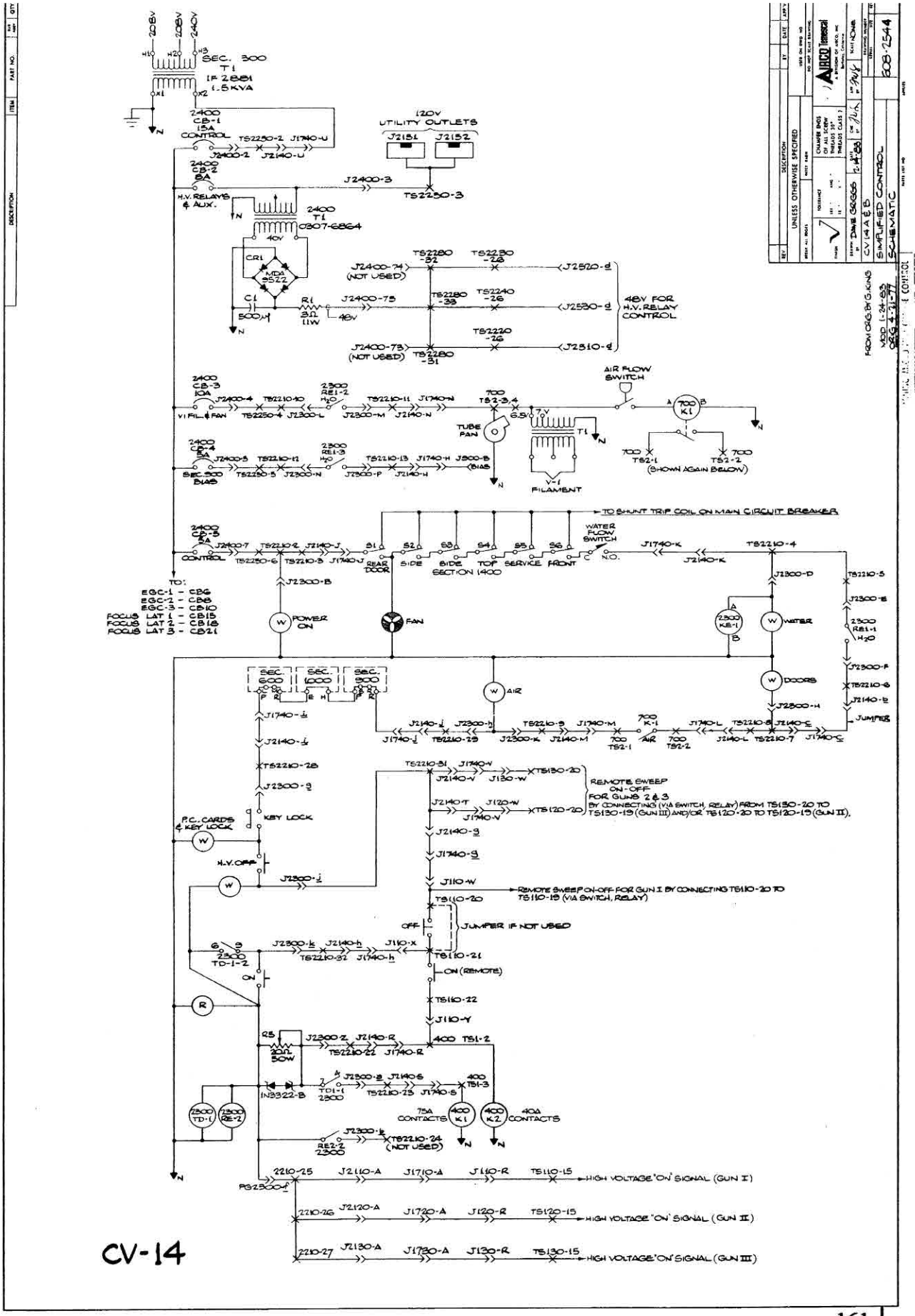
CV-14
SIMPLIFIED CONTROL SCHEMATIC
608-2544
TO SHUNT TRIP COIL ON MAIN CIRCUIT BREAKER
REMOTE SWEEP ON-OFF FOR GUNS 2 & 3 BY CONNECTING (VIA SWITCH, RELAY) FROM TS130-20 TO TS130-19 (GUN III) AND/OR TS120-20 TO TS120-19 (GUN II).
REMOTE SWEEP ON-OFF FOR GUN I BY CONNECTING TS110-20 TO TS110-19 (VIA SWITCH, RELAY)
HIGH VOLTAGE 'ON' SIGNAL (GUN I)
HIGH VOLTAGE 'ON' SIGNAL (GUN II)
HIGH VOLTAGE 'ON' SIGNAL (GUN III)
48V FOR H.V. RELAY CONTROL
120V UTILITY OUTLETS
AIR FLOW SWITCH
WATER FLOW SWITCH
KEY LOCK
P.C. CARDS & KEY LOCK
H.V. OFF
JUMPER IF NOT USED
ON (REMOTE)
UNLESS OTHERWISE SPECIFIED
DAVE GRIGGS
CV 14 A & B

0101-8261-3

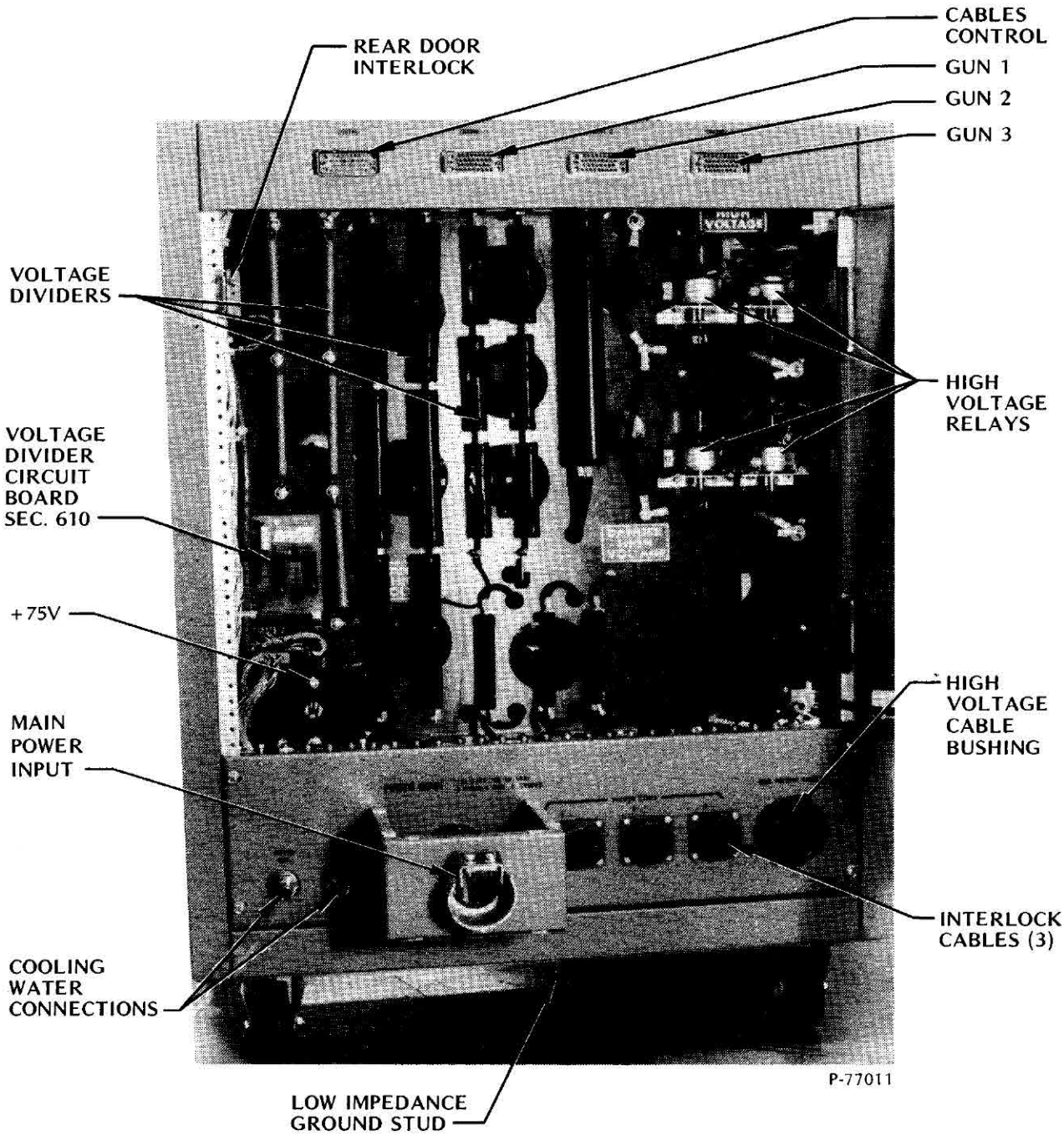

Figure 5-3. CV-14 A and B power supply module rear view

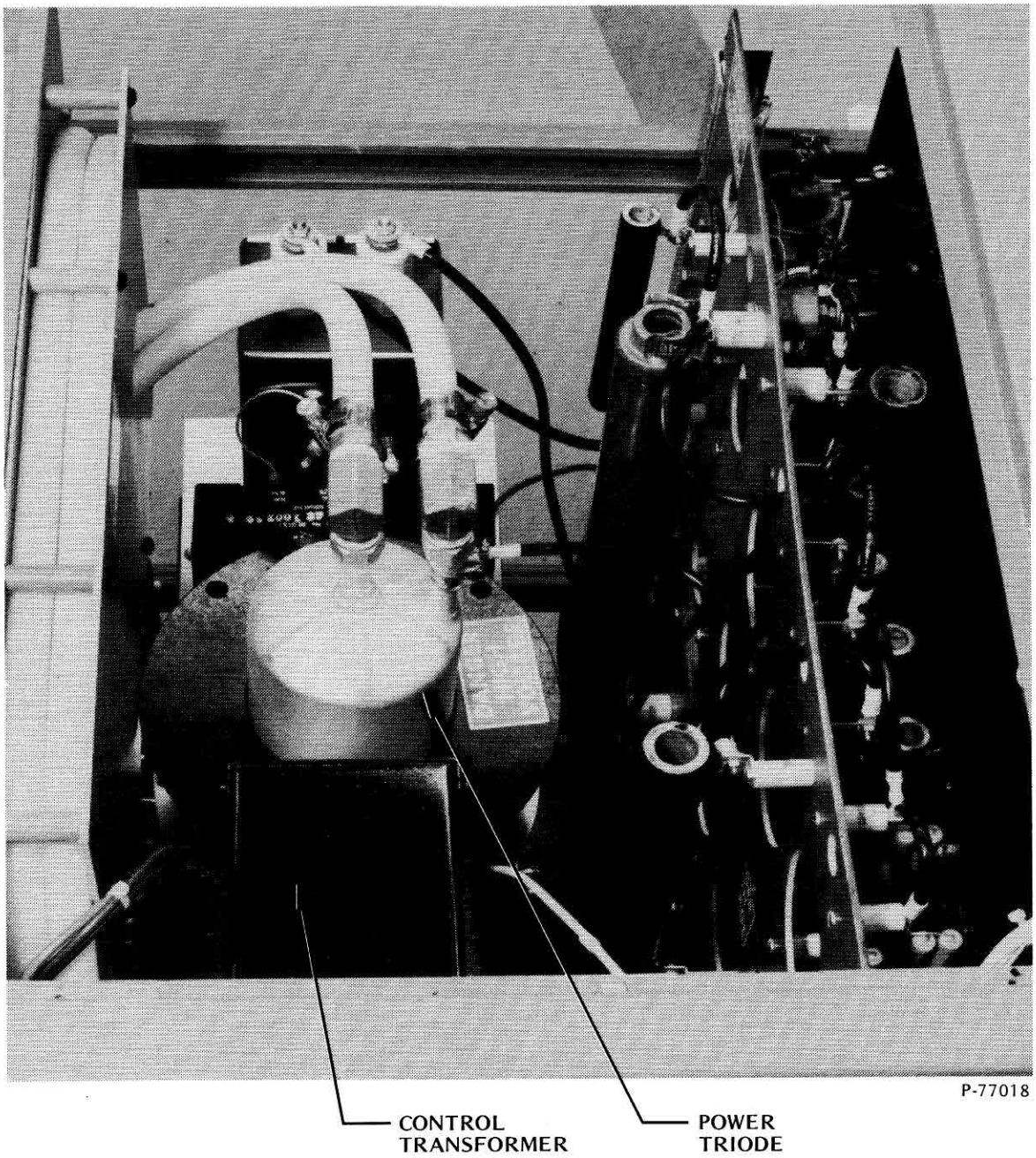

Figure 5-4. CV-14 A and B power supply module top view

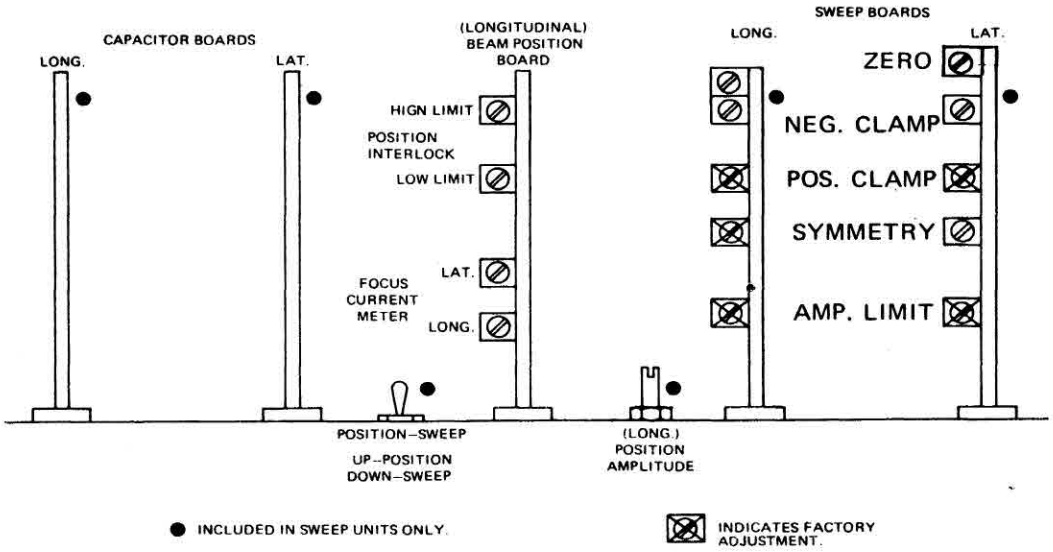

Figure 5-5. CV-14 A and B beam position control and beam position sweep control adjustment locations

5.3 SUBASSEMBLIES, GENERAL DESCRIPTION BY SECTION NUMBER

Section 100:	Service panel
Section 200:	Main circuit breaker
Section 300:	Control transformer
Section 400:	Step-start panel
Section 500:	High voltage transformer
Section 600:	High voltage rectifier panel
Section 700:	Triode plate
Section 800:	Water load
Section 900:	Bias power supply
Section 1000:	Regulator
Section 1100:	Lateral (Y) focus
Section 1200:	Longitudinal (X) focus
Section 1300:	Not used
Section 1400:	Door interlock and fan
Section 1500:	All cables between power supply and vacuum system and all cables between control rack and power supply
Section 1600:	Not used
Section 1700:	Power supply remote panel
Section 1800:	Not used
Section 1900:	Not used
Section 2000:	Not used
Section 2100:	Control cabinet panels
Section 2200:	Test panels
Section 2300:	High voltage control panel
Section 2400:	Circuit breaker panel
Section 2500:	Gun controllers
Section 2600:	Sweep focus power supply
Section 2700:	Beam position focus power supplies

5.4 GENERAL TROUBLESHOOTING INFORMATION

IMPORTANT

Read the high voltage safety precautions at the front of this manual.

Troubleshooting the CV-14 A and B power supplies should be performed in a systematic manner. Use the block diagrams, figure 4-8, to help locate the difficulty. Section 4 should be studied to obtain a clear picture of the circuit operation before troubleshooting individual circuits. Most plugs and jack connections are easily accessible and at convenient locations.

In the event of an apparent primary power malfunction, always check the interlock lights on the control module first. If one or more lights are out, check the interlock indicated by the top unlit indicator. For example, if the DOORS, AIR, and PC CARDS & KEYLOCK lights are off,

but the other lights are on, check the side and rear panels of the power supply module for proper installation. The succeeding interlock indicators will not be energized until the DOORS interlock is satisfied. Also check the circuit breaker panel for open circuit breakers.

If a circuit breaker is open, reset it and proceed with normal operation. In a high power system, transients can trip circuit breakers even if there is no actual malfunction. Assume there is trouble only if the circuit breaker will not stay closed after three tries.

Another frequently overlooked source of trouble is the electron beam gun installation. Excessive arcing, loose connections, cracked or fouled insulators, and poor grounding all cause apparent power supply problems. If a high voltage problem develops, check the physical appearance of the feedthrough insulators. Also check for tight connections with the high voltage off.

After turning off the high voltage ALWAYS attach the grounding hook to the high voltage circuit before touching any part of the high voltage circuit. The grounding hook must be permanently attached to the system ground (see Section 2.3.1).

A high voltage meter is attached to the front panel of the power supply as an integral part. This meter indicates the voltage in the high voltage output during operation.

CAUTION

It is not therefore necessary, and additional independent high voltage measurements using a probe or external meter should NEVER be made.

High voltage can arc over a considerable distance. It is not necessary to physically touch a live terminal for an arc to occur and have the high voltage discharge through your body.

Consistent failure of the supply or regulator circuits indicates radio frequency arcing problems. These can be corrected by installing a better grounding system. Refer to Section 2, Installation, for details.

SECTION 6

PARTS LISTS

6.1 RECOMMENDED SPARE PARTS

ITEM	DESCRIPTION	QUANTITY	PART NUMBER
1	Circuit Breaker, 8A, 250V ac, ETA 45-700P	1	6157-1573-0
2	Circuit Breaker, 5A, 250V ac, ETA 45-700P	1	6157-1574-0
3	Circuit Breaker, 4A, 250V ac, ETA 45-700P	1	6157-1575-0
4	Circuit Breaker, 3A, 250V ac, ETA 45-700P	1	6157-1576-0
5	Relay, Potter & Brumfield KUP14A15	1	6041-4993-0
6	Resistor, 250 kΩ, 50W, Ohmite 0428	1	6469-4702-0
7	Resistor, 10 MΩ, 5W, 1%, Dale DC-5	2	6409-4259-0
8	Diode Bridge, 6A, 100V, Motorola MDA952-2	1	6842-3892-0
9	Diode Bridge, 1.8A, 600V, I-R 18DB6A	1	6842-8193-0
10	Diode, Zener, 4.7V, Motorola 1N750	1	6810-7500-0
11	Diode, Zener, 25V, Motorola 1N3322B	3	6813-3222-0
12	Diode, Zener, 10V, 10W, Motorola 1N2974B	1	6812-9742-0
13	Diode, Zener, 8.8V, 10W, 1N4297	1	6814-2970-0
14	Diode, Zener, Sarkes-Tarzian VR6B	1	6847-0062-0
15	Diode, Zener, 10V, 1W, Motorola 1N4740	1	6814-7400-0
16	Diode, Zener, 11V, 1W, Motorola 1N4741A	1	6814-7411-0
17	Diode, Zener, 6.2V, 5W, Motorola 1N5341A	1	6815-3411-0
18	Diode, 3A, 1 kV, Motorola 1N4722	1	6814-7220-0
19	Diode, 800V, 1W, 10D8	3	6838-9410-0
20	SCR, 16A, 500V, Westinghouse 2N1847	1	6821-8470-0
21	Transistor, RCA 40250	1	6842-7126-0
22	Transistor, Solitron SDT-423	1	6840-9423-0
23	Transistor, RCA 2N697	2	6820-6970-0
24	Transistor, Unijunction, GE 2N2646	1	6822-6460-0
25	Transistor, Motorola 2N3904	1	6823-9040-0
26	Transistor, RCA 40349	1	6840-3490-0
27	Transistor, Motorola 2N3906	2	6823-9060-0
28	Transistor, Motorola 2N2925	2	6822-9250-0
29	Transistor, 2N3055	1	6823-0550-0
30	Transistor, 2N3054	1	6823-0540-0
31	Transistor, 2N4402	1	6824-4020-0
32	Transistor, T.I. 2N3703	1	6823-7030-0
33	Regulator Printed Circuit Assembly	1	0408-1380-0
34	Gun Control Printed Circuit Assembly	1	0407-4060-0
35	Transductor Printed Circuit Assembly	1	0307-1300-6
36	Longitudinal Focus Printed Circuit Assy.	1	0407-3870-1
37	High Voltage Relay Assembly	1	0306-1672-0
38	Resistor, 3MΩ, 60W, 15%, DVY-1	1	6434-0425-1
39	Zener diode IN3322	1	6813-3222-0

The parts listed above are available in a Standard Spares Kit (Temescal part no. 0408-5120-0) and a Basic Spares Kit, which includes all of the above parts except the printed circuit assemblies (Temescal part no. 0505-1980-0).

6.2 ASSEMBLY SPARES

6.2.1 Service Panel, Section 100 0506-2850-0

ITEM	QTY	DESCRIPTION	MFG/PART NO.	TEMESCAL PART NO.
J-110/ 120/130	3	Receptacle	Amphenol 97-3102A-28-126	6045-5312-0
	1	Bushing, 2-inch	OZ BB-200	6014-2366-0
	1	Bushing, 2-inch	OZ A-200F	6014-2319-1
	3 ft	Cable, No. 6-AWG, Type THW, Green		6307-0990-5
	1	Lug	T&B 54135	6014-1707-0
	1	Lug	T&B 54134	6014-1705-0

6.2.2 Main Circuit Breaker and Step-Start Assembly, Section 200, 400 0407-9570-0

ITEM	QTY	DESCRIPTION	MFG/PART NO.	TEMESCAL PART NO.
Model A				
200 CB1	1	Circuit Breaker, 70A, 40°C, 3-Pole, 240V ac	Westinghouse EB3070	6157-1537-0
400 CB1	1	Circuit Breaker, 60A, 70°C	Westinghouse HQCH-3060	6157-1536-0
[Model B]				
[200 CB1	1	Circuit Breaker, 50A, 460V(W)	EHB 3050]	[6157-3050-0]
[400 CB1	1	Circuit Breaker, 40A, 460V(W)	EHB 3040]	[6157-3040-0]
CB2	1	Circuit Breaker, 5A, 2-Pole, 230V	Westinghouse QCL-2005	6157-0003-0
K1	1	Contactor, 110V, 3ϕ, 75A, 50/60 Hz, 600V	A-H ACC-630-V	6157-1506-0
K2	1	Contactor, 110V, 3ϕ, 40A, 50/60 Hz, 600V	A-H ACC-330-U	6157-1503-0
R1-6	6 [3]	Resistor, 5Ω, 50W	Ohmite 0400A	6469-4549-0
TS1	1	Terminal Strip, 10 Pts	Kulka 671-10	6014-8048-0

6.2.3 Control Transformer Assembly, Section 300 0407-9580-0

ITEM	QTY	DESCRIPTION	MFG/PART NO.	TEMESCAL PART NO.
T1	1	Transformer, 1.5 kVA, 50/60 Hz,	Westinghouse 1F2881	6024-5190-0

6.2.4 High Voltage Transformer Assembly, Section 500 0407-9680-0

ITEM	QTY	DESCRIPTION	MFG/PART NO.	TEMESCAL PART NO.
T1	1	Transformer, High Voltage Primary, 208/220/240VΔ, 50/60 Hz [360/380/415VY]	Temescal	0207-6373

6.2.5 High Voltage Rectifier Assembly, Section 600 0407-9590-0

ITEM	QTY	DESCRIPTION	MFG/PART NO.	TEMESCAL PART NO.
C1-6	6	Capacitor, 0.005 mfd, 25 kV	Sprague 708C8	6505-9381-0
CR1-6	6	Rectifier, High Voltage, per	International Rectifier	0307-7293-0
R1-3	3	Resistor, 50Ω, 50W, N.I.	Ohmite 2004	6473-2004-0
R4	1	Resistor, 3 MΩ, 60W, 15%	RPC DVY-1	6434-0425-1
R5	1	Resistor, 10Ω, 100W	Ohmite 0600B	6470-4561-0
R6,17	2	Resistor, 25Ω, 225W	Ohmite 0901	6472-4371-0
R7	6	Resistor, 250 kΩ, 50W	Ohmite 0428	6469-4702-0
R8	6	Resistor, 50 kΩ, 100W	Ohmite 0622	6470-4673-0
R9,10	10	Resistor, 10 MΩ, 5W, 1%	Dale DC-5	6409-4259-0
R19-21	3	Resistor, 1 kΩ, 10W	Ohmite 1736	6453-4623-0
CR7-9	3	Diode, Zener	1N3322	6813-3222-0
K1,2,3	3	High Voltage Relay		0306-1672-0
MT1,2,3	3	Transductor	2F4051	0206-4051-0

6.2.6 High Voltage Rectifier Printed Circuit Board Assembly, Section 610 0407-3100-0

ITEM	QTY	DESCRIPTION	MFG/PART NO.	TEMESCAL PART NO.
C8	1	Capacitor, 0.01 mfd, 1 kV	CRL DD-103	6503-0339-0
C9	1	Capacitor, 1 mfd, 200V	Goodall X663F	6517-1938-0
R11	1	Resistor, 20 kΩ, 10W	Ohmite 1765	6453-4654-0
R12,16	2	Resistor, 10 kΩ, 2W, 5%		6407-4654-0
R13	1	Resistor, 100 kΩ, 2W, 5%		6407-4690-0
R14	1	Resistor, 2.5Ω, 10W	Dale RS-10	6443-4039-0
R15	1	Resistor, 10Ω, 2W, 5%		6407-4561-0
RC10	1	Diode, Zener	Sarkes-Tarzian VR-6B	6847-0062-0

6.2.7 Triode Plate Assembly, Section 700 0407-9600-0

ITEM	QTY	DESCRIPTION	MFG/PART NO.	TEMESCAL PART NO.
C1	1	Capacitor, 1 mfd, 600V	Goodall X663F	6517-1978-0
C2,3	2	Capacitor, 1 mfd, 200V	Goodall X663F	6517-1938-0
C4	1	Capacitor, 1 mfd, 15 kV	Plastic Capacitor LK150-105	6505-9423-0
K1	1	Relay, 120V ac	Potter & Brumfield KUP14A15	6041-4993-0
R1	1	Resistor, 10Ω, 10W, N.I.	Sprague 457E1005	6473-2051-0
B1	1	Air Flow Switch, 100A	Fairchild PSF	6156-4311-0
T1	1	Transformer, 6.5V	Temescal	0205-0153-0
V1	1	Triode Tube	EIMAC 3CW, 20, 000A7	6921-2333-2
B1	1	Blower	Dayton 1C-180	6271-3180-0
		Triode Tube Socket		6047-2099-0

6.2.8 Water Load and Water Circuit Assembly, Section 800 0407-9610-0

ITEM	QTY	DESCRIPTION	MFG/PART NO.	TEMESCAL PART NO.
R1,2	30 ft	Hose, Polyethylene, 1/2-inch i.d.	Carbon Plastic 9300-262	2005-0050-0
S1	1	Flow Switch	McDonnell FSI	9102-0001-0

6.2.9 Bias Supply Assembly, Section 900 0407-9620-0

ITEM	QTY	DESCRIPTION	MFG/PART NO.	TEMESCAL PART NO.
C1	2	Capacitor, 1250 mfd, 180V	Barry Electronics	6505-3019-0
L1	1	Choke, 3Ω, 0.3H	Stancor C-2690	6054-1137-0
CR6	1	Diode	1N4722/MR-1034A	6814-7220-0
CR7	1	Diode, Zener, 10V, 10W	1N2974B	6812-9742-0
CR8	1	Diode, Zener, 8.8V, 10W	1N4297	6814-2970-0
R1,2	2	Resistor, 250Ω, 175W	Ohmite 0706	6465-4602-0
R3	1	Resistor, 5 kΩ, 10W, WW	Lectrohm	6423-1749-0
T1	1	Transformer	F&R 2F-1101 (2T13-3)	0206-1101-0

6.2.10 Bias Supply Printed Circuit Board Assembly, Section 910 0407-3130-0

ITEM	QTY	DESCRIPTION	MFG/PART NO.	TEMESCAL PART NO.
C2	1	Capacitor, 500 mfd, 25V	Sprague TVA-1209	6510-0159-0
C3	1	Capacitor, 1000 mfd, 12V	Sprague TVA-1133	6510-0963-0
C4	1	Capacitor, 100 mfd, 25V	Sprague TE-1211	6513-0856-0
CR1-4	4	Diode, 1A, 800V	I-R 10D8	6838-9410-0
CR5	1	Diode Bridge	I-R 18DB6A	6842-8193-0
R4	1	Resistor, 15Ω, Brown Devil	Ohmite 1712	6423-1712-0
R5	1	Resistor, 5Ω, 3W	Ohmite 4349	6408-4349-0

6.2.11 **Regulator Printed Circuit Board Assembly, Section 1000** 0408-1380-0

ITEM	QTY	DESCRIPTION	MFG/PART NO.	TEMESCAL PART NO.
C1,2	2	Capacitor, 0.1 mfd, 200V	Goodall X663F	6517-1933-0
C3	1	Capacitor, 0.1 mfd, 400V	Goodall X663F	6517-1328-0
CR1,2,3	3	Diode	I-R 10D8	6838-9410-0
R1,2	2	Potentiometer, 200Ω, 1W	CTS 350PC201A or IRC 100-1	6046-2682-0
R6	1	Potentiometer, 10 kΩ, 1W	CTS 35PC103A or IRC 100-1	6046-1738-0
R3,4,8,12,14	5	Resistor, 100Ω, 1/2W		6405-4592-0
R5,7,9,10	4	Resistor, 1 kΩ, 1/2W		6405-4623-0
R11	1	Resistor, 4.7 kΩ, 1/2W		6405-4641-0
R13	1	Resistor, 8.2 kΩ, 1/2W		6405-4651-0
R15	1	Resistor, 20Ω, 2W		6407-4568-0
R16	1	Resistor, 20Ω, 1W		6406-4568-0
R17	1	Resistor, 2Ω, 11W	Ohmite 4737	6411-4537-0
Q1,2,3	3	Transistor	2N2925	6822-9250-0
Q4	1	Transistor	RCA 40250	6842-7126-0
Q5	1	Transistor	Solitron SDT-423	6840-9423-0

6.2.12 **Lateral/Longitudinal Sweep Power Supply Assembly, Section 1100** 0408-0710-0

ITEM	QTY	DESCRIPTION	MFG/PART NO.	TEMESCAL PART NO.
C3,4	2	Capacitor, 4500 mfd, 50V	Mallory CG-452U500-1	6505-8130-0
CR1,3	2	Diode Bridge	Motorola MDA952-2	6842-3892-0
CR2,4	2	Diode, Zener	1N2979B	6812-9792-0
R3,4	2	Resistor, 6.8 kΩ, 1/2W		6405-4647-0
T1	1	Transformer	Triad F49U	6054-2014-0

6.2.13 **Lateral Focus Power Supply Printed Circuit Assembly, Section 1111** 0407-3170-0

ITEM	QTY	DESCRIPTION	MFG/PART NO.	TEMESCAL PART NO.
C1,2	2	Capacitor, 500 mfd, 25V dc	Sprague TVA-1209	6510-0159-0
R1,2	2	Resistor, 100Ω, 25W	Dale HL-25	6445-4372-0

6.2.14 **Longitudinal Focus Power Supply Assembly, Section 1200** 0408-0720-0

ITEM	QTY	DESCRIPTION	MFG/PART NO.	TEMESCAL PART NO.
C1	1	Capacitor, 2000 mfd, 50V dc	Mallory CG-23U50C2	6505-8149-0
CR1	1	Diode Bridge	Motorola MDA952-2	6842-3892-0
T1	1	Transformer	Temescal	0206-5521-0

6.2.15 **Door Interlocks and Fan Assembly, Section 1400** 0407-9650-0

ITEM	QTY	DESCRIPTION	MFG/PART NO.	TEMESCAL PART NO.
SW1-3	3	Door Switch	Microswitch 23AC1	6156-9231-0

6.2.16 **All Standard Cables, Section 1500**

ITEM	QTY	DESCRIPTION	MFG/PART NO.	TEMESCAL PART NO.
	1	Tank Cable No. 1, 20 ft.	Temescal	0506-2830-1
	1	Tank Cable No. 2, 20 ft.	Temescal	0506-2830-2
	1	Tank Cable No. 3, 20 ft.	Temescal	0506-2830-3

ITEM	QTY	DESCRIPTION	MFG/PART NO.	TEMESCAL PART NO.
	1	High Voltage Cable No. 1, 20 ft	Temescal	0407-8670-1
	1	High Voltage Cable No. 2, 20 ft.	Temescal	0407-8670-2
	1	High Voltage Cable No. 3, 20 ft.	Temescal	0407-8670-3
	1	Channel No. 1, 2 ft.	Temescal	0407-8650-1
	1	Channel No. 2, 2 ft.	Temescal	0407-8650-2
	1	Channel No. 3, 2 ft.	Temescal	0407-8650-3
	1	Control Cable, 2 ft.	Temescal	0407-8640-1

6.2.17 **Remote Panel Hardware, Section 1700** 0407-9670-0

ITEM	QTY	DESCRIPTION	MFG/PART NO.	TEMESCAL PART NO.
J1740	1	Connector	Winchester XAC-34-SF2D010	6047-7907-0
J1710	1	Connector Channel 1	Winchester XAC-34-PF1A010	6047-7908-0
J1720	1	Connector Channel 2	Winchester XAC-34-PF1B010	6047-7909-0
J1730	1	Connector Channel 3	Winchester XAC-34-PF1C010	6047-7910-0
	99	Contacts	Winchester 100-1016P	6047-8023-0
	27	Contacts	Winchester 100-1016S	6047-8024-0

6.2.18 **Control Connector Panel, Section 2100** 0411-8430-0

ITEM	QTY	DESCRIPTION	MFG/PART NO.	TEMESCAL PART NO.
J2140	1	Connector Control	Winchester XAC-34-PF1D010	6047-7903-0
J2110	1	Connector Channel 1	Winchester XAC-34-SF2A010	6047-7904-0
J2120	1	Connector Channel 2	Winchester XAC-34-SF2B010	6047-7905-0
J2130	1	Connector Channel 3	Winchester XAC-34-SF2C010	6047-7906-0
	34	Contacts	Winchester 100-1016P	6047-8023-1
	102	Contacts	Winchester 100-1016S	6047-8024-1
	15	Contacts	Winchester 100-1014S	6047-8021-0
	15	Contacts	Winchester 100-1020S	6047-8030-0
	5	Contacts	Winchester 100-1014P	6047-8019-1
	2	Receptacle	Hubbell 5258	6015-5258-0

6.2.19 **Test Panels, Section 2200** 0407-9710-0

ITEM	QTY	DESCRIPTION	MFG/PART NO.	TEMESCAL PART NO.
R1-3	3	Resistor, 10Ω, 50W	Ohmite 0400B	6469-4561-0
SW1-3	3	Toggle Switch, 2-Position, Double Pole	AH&H 83031	6156-3063-0

6.2.20 **High Voltage Control Panel Chassis, Section 2300** 0506-2840-0

ITEM	QTY	DESCRIPTION	MFG/PART NO.	TEMESCAL PART NO.
LT1-5	5	Light, White, 125V ac, POWER ON, WATER, DOORS, AIR, KEYLOCK	Molex 1829	6156-1507-0
ME1	1	Meter, 0-1 mA dc, 0-15 kV Scale	GE 50-167111FAFA3	6700-5029-0
R1	1	Potentiometer, 5-Turn, 100Ω	Bourns 3520S-1-101	6046-7810-1
R2	1	Potentiometer, 5-Turn, 5 kΩ	Bourns 3520S-1-502	6046-7850-2
R3	1	Potentiometer, 2.5 kΩ, 2W	Ohmite CLU-2521	6046-1530-0
RE1,2	2	Relay, 120V ac	Potter & Brumfield KUP14A15	6041-4993-0
SW1	1	Pushbutton, SP/DT, Momentary-Contact, Red, H.V. ON	Molex 1825	6156-1505-0
	1	Zener Diode IN3322	Motorola	6813-3222-0
	1	Variable Resistor 25M, 50W	Ohmite	6462-4555-0

ITEM	QTY	DESCRIPTION	MFG/PART NO.	TEMESCAL PART NO.
SW2	1	Pushbutton, SP/DT, Momentary-Contact, White, H.V. OFF	Molex 1820	6161-1820-0
SW3	1	Switch, Lock-Type,Contact, N.O., (Key remains in OFF position)	Ace 4073-1	6156-1504-0
TD1	1	Time Delay	Potter & Brumfield CUA41-71004	6041-2704-0

6.2.21 **Sweep Auxiliary Power Supply Assembly, Section 2311** 0408-0320-1

ITEM	QTY	DESCRIPTION	MFG/PART NO.	TEMESCAL PART NO.
C1,2	2	Capacitor, 500 mfd, 50V	Sprague 1315	6510-0975-0
CR1,2	2	Diode, Zener	1N2979B	6862-9792-0
CR7,8	2	Diode Bridge	I-R 18DB6A	6842-8193-0
R1,2	2	Resistor, 200Ω, 25W	Ohmite 0200H	6468-4599-0
R7,8	2	Resistor, 1 kΩ, 12W	Lectrohm	6423-1736-0

6.2.22 **Circuit Breaker Panel Chassis, Section 2400** 0506-2850-0

ITEM	QTY	DESCRIPTION	MFG/PART NO.	TEMESCAL PART NO.
C1	1	Capacitor, 500 mfd, 50V dc	Sprague TVA-1315	6510-0975-0
CB1	1	Circuit Breaker, 15A, 250V ac	ETA 45-700-P	6157-1571-0
CB2,6-11	7	Circuit Breaker, 8A, 250V ac	ETA 45-700-P	6157-1573-0
CB3	1	Circuit Breaker, 10A, 250V ac	ETA 45-700-P	6157-8700-0
CB4,5,15, 18,21	5	Circuit Breaker, 5A, 250V ac	ETA 45-700-P	6157-1574-0
CB12-14,16, 17,19,20, 22,23	9	Circuit Breaker, 3A, 250V ac	ETA 45-700-P	6157-1576-0
CB24,25	2	Circuit Breaker, 4A, 250V ac	ETA 45-700-P	6157-1575-0
CR1	1	Diode Bridge, 6A, 100V	Motorola MDA952-2	6842-3892-0
RE1-4	4	Relay, 120V	Potter & Brumfield KUP14A15	6041-4993-0
R1	1	Resistor, 3Ω, 11W	Ohmite 4742	6423-4742-0
T1	1	Transformer, 115V/40V	Temescal VTS-260	0307-3841-0

6.2.23 **Electron Gun Controller, Guns No. 1, 2, and 3, Section 2500** 0506-2740-1,-2,-3

ITEM	QTY	DESCRIPTION	MFG/PART NO.	TEMESCAL PART NO.
C1,3	2	Capacitor, 0.047 mfd, 200V, Mylar	TRW X663F	6517-1932-0
C2	1	Capacitor, 1 mfd, 200V, Mylar	TRW X663F	6517-1938-0
J2510	1	Connector	Winchester MRAC-34-P	6047-8059-0
XJ2510	23	Contacts	Winchester 100-1020P	6047-8026-0
XJ2510	3	Contacts	Winchester 100-1016P	6047-8023-0
XJ2510	1	Loc-Pin Set	Winchester G-700	6047-8700-0
J2512	1	Connector, 15-Pin	Amphenol 143-015-01-110	6047-2381-0
J2511	1	Connector, 22-Pin	Amphenol 225-22221-101	6047-2344-0
	2	Heatsink	Modified Wakefield NC403K	0306-8152-2
ME1	1	Meter, 0-1.5A	GE	6700-5030-0
XME1	1	Meter, Bezel	GE	6703-1700-0
R4	2	Resistor, 1Ω, 25W		6468-4530-0
R6	1	Resistor, 2.7 kΩ, 1/2W, 5%		6405-4634-0

ITEM	QTY	DESCRIPTION	MFG/PART NO.	TEMESCAL PART NO.
R1	1	Resistor, 10Ω, 2W, 5%		6407-4561-0
R5	1	Potentiometer, 1 kΩ, 5-Turn	Bourns 3520-S-1-102	6046-7810-2
XR5	1	Counting Dial	Clarodial 411	6047-7104-0
RE1	1	Relay, 120V	Potter & Brumfield KUP14A15	6041-4993-0
XRE1	1	Socket	Potter & Brumfield 9KU1	6048-1981-0
S1	1	Switch, DP/DT	C&K 7208-PZE	6156-7208-0
CR1,CR2	2	SCR	Westinghouse 2N1847	6821-8470-0
CR3	1	Rectifier Bridge	Motorola 18DB6A	6842-8193-0
	1	Terminal Board, 10 Pt.	Kulka 10-170	6047-0999-0
LT1	1	Light, VACUUM TANK	Molex 1829	0408-0992-6
LT2	1	Light, VAC GAUGE	Molex 1829	0408-1002-7
LT3	1	Light, GUN WATER	Molex 1829	0408-0992-7
LT4	1	Light, AUXILIARY	Molex 1829	0408-0992-8
LT5	1	Light, FOCUS	Molex 1829	0408-0992-9
LT7	1	Light, AUTOMATIC	Molex 1829	0408-1002-1
LT6	1	Light, 1-GUN 1-TANK	Molex 1829	0408-1002-2
LT6	1	Light, 2-GUNS 1-TANK	Molex 1829	0408-1002-3
LT6	1	Light, 2-GUNS 2-TANKS	Molex 1829	0408-1002-4
LT6	1	Light, 3-GUNS 1-TANK	Molex 1829	0408-1002-5
LT6	1	Light, 3-GUNS 3-TANKS	Molex 1829	0408-1002-6
PB2	1	Pushbutton, GUN-1 FIL. ON	Molex 1825	0408-1022-2
PB2	1	Pushbutton, GUN-2 FIL. ON	Molex 1825	0408-1022-3
PB2	1	Pushbutton, GUN-3 FIL. ON	Molex 1825	0408-1022-4
PB1	1	Pushbutton, GUN-1 FIL. OFF	Molex 1825	0408-1012-2
PB1	1	Pushbutton, GUN-2 FIL. OFF	Molex 1825	0408-1012-3
PB1	1	Pushbutton, GUN-3 FIL. OFF	Molex 1825	0408-1012-4
Sec. 2511	1	Gun Control PC Assembly	Temescal	0407-4060-0
Sec. 2512	1	Transductor PC Assembly	Temescal	0307-1300-6

6.2.24 Gun Controller PC Assembly, Section 2511 0407-4060-0

ITEM	QTY	DESCRIPTION	MFG/PART NO.	TEMESCAL PART NO.
C3	1	Capacitor, 1 mfd, 25V	Sprague TE-1200	6512-0847-0
C2	2	Capacitor, 10 mfd, 50V	Sprague TE-1304	6505-1789-0
C1	1	Capacitor, 0.1 mfd, 200V, Mylar	TRW X663F	6517-1933-0
C8	1	Capacitor, 1000 mfd, 25V	Sprague TVA-1211	6505-6513-0
C5	1	Capacitor, 0.047 mfd, 200V	TRW X663F	6517-1932-0
C4,7	2	Capacitor, 50 mfd, 50V	Sprague TE-1307	6513-0865-0
C6	1	Capacitor, 0.1 mfd, 100V		6504-5999-0
C9	1	Capacitor, 0.01 mfd, 100V	Erie 811-000-Z5UD103M	6590-0002-0
C10	1	Capacitor, 4 mfd, 50V	Sprague TE-1302	6513-1257-0
L1	1	Choke, 1 mH	Nytronic 1000	6831-0112-0
CR2	1	Diode, Zener, 4.7V	Motorola 1N750	6810-7500-0
CR3	1	Diode, Zener, 10V	Motorola 1N4740	6814-7400-0
CR1,4,5,7, 8-14	11	Diode, 800V	I-R 10D8	6838-9410-0
CR6	1	Rectifier Bridge	I-R 18DB6A	6840-8193-0
K2	1	Relay	Potter & Brumfield R10-E2-Y2	6041-0010-0
R1,2	2	Resistor, 47Ω, 1/2W		6405-4579-0
R13	1	Resistor, 220Ω, 1/2W		6405-4600-0
R18,21	2	Resistor, 390Ω, 1/2W		6405-4607-0

ITEM	QTY	DESCRIPTION	MFG/PART NO.	TEMESCAL PART NO.
R11,23	2	Resistor, 470Ω, 1/2W		6405-4610-0
R9,28	2	Resistor, 680Ω, 1/2W		6405-4616-0
R3,25	2	Resistor, 1 kΩ, 1/2W		6405-4623-0
R14	1	Resistor, 1.2 kΩ, 1/2W		6405-4625-0
R12,16	2	Resistor, 4.7 kΩ, 1/2W		6405-4641-0
R17	1	Resistor, 6.8 kΩ, 1/2W		6405-4647-0
R7	1	Resistor, 7.5 kΩ, 1/2W		6405-4699-0
R31	1	Resistor, 10 kΩ, 1/2W		6405-4654-0
R6,8,22	3	Resistor, 15 kΩ, 1/2W		6405-4658-0
R10	1	Resistor, 47 kΩ, 1/2W		6405-4675-0
R5,20	2	Resistor, 100 kΩ, 1/2W		6405-4690-0
R19	1	Resistor, 150 kΩ, 1/2W		6405-4695-0
R15	1	Resistor, 330Ω, 2W		6407-4605-0
R24,33	2	Resistor, 100Ω, 11W		6411-4792-0
R29	1	Potentiometer, 1 kΩ, 3/4W	Beckman 89PR1K	6046-8701-1
R26	1	Potentiometer, 2 kΩ, 3/4W	Beckman 89PR2K	6046-8702-1
R32	1	Potentiometer, 10 kΩ, 3/4W	Beckman 89PR10K	6046-8710-1
T1	1	Transformer	Gudeman G-4017	6054-4017-0
Q1	1	Transistor	RCA 2N697	6820-6970-0
Q4	1	Transistor	RCA 40349	6840-3490-0
Q5,6,7	3	Transistor	Motorola 2N3904	6823-9040-0
Q3,8	2	Transistor	Motorola 2N3906	6823-9060-0
Q2	1	Transistor, Unijunction	GE 2N2646	6822-6460-0
	1	PC Board Fab	Temescal	0407-4053-0

6.2.25 Transductor Amplifier PC Assembly, Section 2512 0307-1300-6

ITEM	QTY	DESCRIPTION	MFG/PART NO.	TEMESCAL PART NO.
C1,2	2	Capacitor, 100 mfd, 25V	Sprague TE-1211	6513-0856-0
C3	1	Capacitor, 0.47 mfd, 100V	TRW X663F	6517-1906-0
CR1,2,6	3	Diode, 1A	I-R 10D8	6838-9410-0
CR3,4	2	Diode, Zener, 11V, 1W	Motorola 1N4741A	6814-7411-0
CR5	1	Diode Bridge, 6A	I-R 18DB6A	6842-8193-0
R7	1	Resistor, 100Ω, 1/2W		6405-4592-0
R1	1	Resistor, 300Ω, 1/2W		6405-4604-0
R2	1	Resistor, 390Ω, 1/2W		6405-4607-0
R11	1	Resistor, 1 kΩ, 1/2W		6405-4623-0
R3	1	Resistor, 2 kΩ, 1/2W		6405-4630-0
R12	1	Resistor, 5.1 kΩ, 1/2W		6405-4643-0
R10	1	Resistor, 12 kΩ, 1/2W		6405-4656-0
R8	1	Resistor, 18 kΩ, 1/2W		6405-4660-0
R6,9	2	Resistor, 20 kΩ, 1/2W		6405-4661-0
R4	1	Potentiometer, 2 kΩ, 3/4W	Beckman 89PR2K	6046-8702-1
R13	1	Potentiometer, 5 kΩ, 3/4W	Beckman 89PR5K	6046-8705-1
T1	1	Transformer	F&R 2T18	0206-4041-0
Q1	1	Transistor	T.I. 2N3703	6823-7030-0
Q2	1	Transistor	GE 2N2925	6822-9250-0
	1	PC Board Fab	Temescal	0206-4023-0

6.2.26 Beam Sweep Control Chassis, Section 2600 0506-2860-2

ITEM	QTY	DESCRIPTION	MFG/PART NO.	TEMESCAL PART NO.
ME1	1	Meter, 3-0-3A Scale, 1-0-1 mA dc Movement, 3-1/2-inches, Horizontal Line	GE 50-167111FAFA	6700-5031-0
R4,4	1	Potentiometer, 25 kΩ, 2W	Ohmite CMU-2531	6046-1620-0
R3,5,2	3	Potentiometer, 10 kΩ, 2W	Amphenol 4101B	6046-9410-0
R7	1	Potentiometer, 1 kΩ, 2W	Amphenol 4101B	6046-9401-0
R1,6,10	3	Resistor, 1Ω, 11W	Ohmite 0200J	6468-4530-0
Q1	1	Transistor	Motorola 2N3792	6823-7920-0
Q2,3	2	Transistor	RCA 2N3055	6823-0550-0
R9,11	2	Resistor, 180Ω, 11W	Ohmite	6411-4598-0
R13,14	2	Resistor, 2Ω, 11W	Ohmite	6411-4537-0
S3	1	Switch, DP/DT	C&K 7201PE	6156-7201-6
S4	1	Switch, SP/DT	C&K 7101	6156-7101-1
S1,2	2	Switch, Digital	Digitran 8031-1	6156-8031-9

6.2.27 Longitudinal Focus Printed Circuit Board Assembly, Section 2611 0407-3870-1

ITEM	QTY	DESCRIPTION	MFG/PART NO.	TEMESCAL PART NO.
C1,2	2	Capacitor, 0.05 mfd, 50V, Ceramic	CRL CK-503	6503-1647-0
CR1-4,6,7	6	Diode	I-R 10D8	6838-9410-0
CR5	1	Diode, Zener	1N5341A	6815-3411-0
R7,14	2	Potentiometer, 200Ω	Beckman Type 79PR	6046-8620-0
R20,21	2	Potentiometer, 2 kΩ	Beckman Type 79PR	6046-8702-0
RE1	2	Relay	Zettler AZ428-70-4H	6041-0428-7
R1	1	Resistor, 390Ω, 5-1/4W, 5%	Ohmite 2884	6421-2884-0
R2	1	Resistor, 1 kΩ, 1/2W, 5%		6405-4623-0
R3,11,15, 22,23	5	Resistor, 2 kΩ, 1/2W, 5%		6405-4630-0
R4	1	Resistor, 22 kΩ, 1/2W, 5%		6405-4662-0
R5,10	2	Resistor, 10 kΩ, 1/2W, 5%		6405-4154-0
R6	1	Resistor, 4.7 kΩ, 1/2W, 5%		6405-6441-0
R8,13	2	Resistor, 200Ω, 1/2W, 5%		6405-4599-0
R12	1	Resistor, 820Ω, 1/2W, 5%		6405-4620-0
R16	1	Resistor, 510Ω, 1/2W, 5%		6405-6412-0
R17	1	Resistor, 1Ω, 20W, WW	Lectrohm	6425-1802-0
R18	1	Resistor, 47Ω, 1/2W, 5%		6405-4579-6
R19	1	Resistor, 75Ω, 1/2W, 5%		6405-4587-0
Q1,4,6	3	Transistor	2N3904	6823-9040-0
Q2,5	2	Transistor	2N3906	6823-9060-0
Q3	1	Transistor	2N3054	6823-0540-0
Q7	1	Transistor	2N4402	6824-4020-0

6.2.28 LATERAL LONG SWEEP P.C. BOARD ASSY., SECTS. 2612 and 2613 0409-4560-0

ITEM	QTY	DESCRIPTION	MFG/PART NO.	TEMESCAL PART NO.
C1	1	Capacitor, 0.001 mfd, 1 kV, Ceramic	Sprague 5HK-D10	6503-1575-0
CR1	1	Diode	I-R 10D8	6838-9410-0
CR2	1	Diode, Zener	1N4749	6314-7490-0
A1	1	Operational Amplifier	Nexus SQ10A	6928-0010-0
R5,12,37,38	4	Potentiometer, 10 kΩ, Helitrim	Beckman Type 89PR	6046-8710-1

ITEM	QTY	DESCRIPTION	MFG/PART NO.	TEMESCAL PART NO.
R14	1	Resistor, 20 kΩ, 1/2W, 5%		6405-4661-0
R3,30	2	Resistor, 3 kΩ, 1/2W, 5%		6405-4635-0
R4	1	Resistor, 6.8 kΩ, 1/2W, 5%		6405-4647-0
R7	1	Resistor, 560Ω, 1/2W, 5%		6405-4613-0
R8,16,18,6, 22-24,26-28, 34,36	12	Resistor, 1 kΩ, 1/2W, 5%		6405-4623-0
R9,11,15	3	Resistor, 68 kΩ, 1/2W, 5%		6405-4682-0
R10	1	Resistor, 150Ω, 1/2W, 5%		6405-4596-0
R17	1	Resistor, 680 kΩ, 1/2W, 5%		6405-4718-0
R19	1	Resistor, 100Ω, 2W, 5%		6407-4592-0
R20,29	2	Resistor, 10Ω, 1/2W, 5%		6405-4561-0
R25	1	Resistor, 1 kΩ, 5W, 5%	Sprague 452E1025	6421-2894-0
Q1	1	Transistor	RCA 2N3251	6823-2510-0
Q2,4	2	Transistor	RCA 2N2925	6822-9250-0
Q3	1	Transistor	RCA 2N1671	6821-6710-0
Q5	1	Transistor	RCA 2N3494	6823-4940-0
Q6	1	Transistor	Motorola 2N3741	6823-7410-0
Q9	1	Transistor	RCA 2N3441	6823-4410-0
Q8	1	Transistor	RCA 2N3498	6823-4980-0
Q7	1	Transistor	RCA 40373	6840-3730-0
Q10	1	Transistor	Motorola 2N3904	6823-9040-0
Q11	1	Transistor	Motorola 2N3906	6823-9060-0
R39	1	Potentiometer, 2 kΩ, Helitrim	Beckman 89PR	6046-8702-1
R13	1	Resistor, 10 kΩ, 1/2W, 5%		6405-4654-0

6.2.29 Capacitor Focus Printed Circuit Board Assembly, Sections 2614 and 2615 0407-3980-0

ITEM	QTY	DESCRIPTION	MFG/PART NO.	TEMESCAL PART NO.
C1	1	Capacitor, 1 mfd, 50V dc	Sprague TE-1300	6513-0857-0
C2	1	Capacitor, 2 mfd, 50V dc	Sprague TE-1301	6513-6642-0
C3	1	Capacitor, 4 mfd, 50V dc	Sprague TE-1302.1	Y407-3980-4
C4	1	Capacitor, 10 mfd, 50V dc	Sprague TE-1304	6505-1789-0
C5	1	Capacitor, 100 mfd, 50V dc	Sprague 39D	6505-6828-0
C6	1	Capacitor, 25 mfd, 50V dc	Sprague TE-1305.5	Y407-3980-6
C7	1	Capacitor, 35 mfd, 50V dc	Sprague TE-1306	Y407-3980-7
C8	1	Capacitor, 75 mfd, 50V dc	Sprague TE-1308	Y407-3980-9
C9	1	Capacitor, 50 mfd, 50V dc	Sprague TE-1307	6513-0865-0
C10	1	Capacitor, 250 mfd, 50V dc	Sprague 39D	6505-6531-0

6.2.30 Manual Beam Position Control Chassis, Section 2700 0411-8320-0

ITEM	QTY	DESCRIPTION	MFG/PART NO.	TEMESCAL PART NO.
J2710	1	Connector	Winchester MRAC-34-P	6047-8059-0
J2710	8	Contacts	Winchester 100-1020P	6047-8026-0
J2710	1	Loc-Pin Set	Winchester G-700	6047-8700-0
	1	Connector	Amphenol 225-21531-101	6047-2381-0
L1	1	Choke	Ohmite Z20	6054-5020-0
	1	Heatsink	Wakefield	0306-1162-1
	4	Insulator, Teflon	Wakefield No. 103	6060-6519-0

ITEM	QTY	DESCRIPTION	MFG/PART NO.	TEMESCAL PART NO.
ME1	1	Meter, 0-03A	GE 50-167111FAFA1JEY	6700-5020-0
XME1	1	Meter, Bezel	GE 1012K11-700	6703-1700-0
R1	1	Resistor, 1Ω, 25W	Ohmite	6468-4530-0
R2	1	Potentiometer, 1 kΩ, 5-Turn	Bourns 3520-S-1-102	6046-7810-2
XR2	1	Turns Counter	Spectrol 11-1-11	6706-1111-0
Q1	1	Transistor	2N3055	6823-0550-0
XQ1	1	Socket, Transistor	Eby 9866-15-1	6047-0262-0
	1	Unitrack, Black		6950-3000-0
Sec. 2611	1	Longitudinal Focus PC Assembly	Temescal	0407-3870-0

6.2.31 Miscellaneous Items

ITEM	QTY	DESCRIPTION	MFG/PART NO.	TEMESCAL PART NO.
		Filament Transformer for Electron Beam Gun	840VA	0205-5443-0
		Filament Lead Wire, 2-conductor, Shielded		6341-7011-0
		High Voltage Coaxial Cable	RG266A/U	6341-0226-0
		Grounding Hook		0410-9474-0

1-8261-0

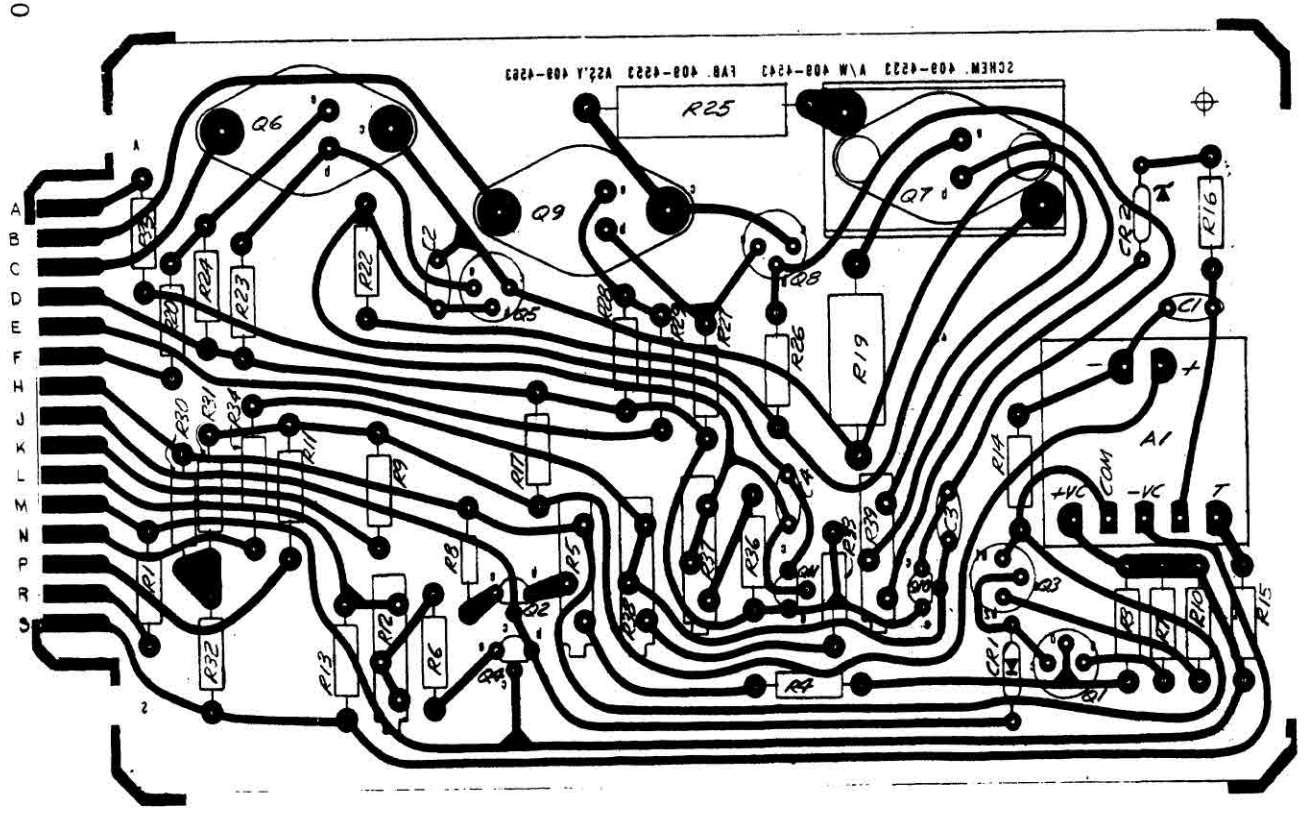

COMPONENT SIDE

NOTES:

1. REF. DWGS:
   SCHEM. -409-4533C
   A/W 409-4543E
   FAB. 409-4553F

REV.	DESCRIPTION	BY	DATE	APPV'D
E	REVISED & REDRAWN	D.G.	[illegible]	[illegible]
D	REMOVED R21/18 ADDED R39 (POT) D.C.N. #0489	VBB	6-17-74	[illegible]
C	REVISED PER M.U.	D.G.	[illegible]	[illegible]
B	REVISED & REDRAWN	R.E.W.	10-29-73	[illegible]

DO NOT SCALE DRAWING
UNLESS OTHERWISE SPECIFIED

FINISH	TOLERANCE	INTER. RADII	USED ON DWG.
√	XXX ±.015 ANG ± 1° XX ± — X ± —	MIN. BREAK ALL EDGES AS REQ'D	409-4563

BERKELEY AIRCO Temescal CALIFORNIA
A DIVISION OF AIRCO, INCORPORATED

DRAWN BY	DATE	CHK BY	APP BY	SCALE
R.E. WALKER	10/25/73	VBB	[illegible]	2:1

A.T. STD CV14/8

LONG. & LAT. SWEEP P.C. BOARD (SERIES)

DRAWING NUMBER: 409-4563 REV. C

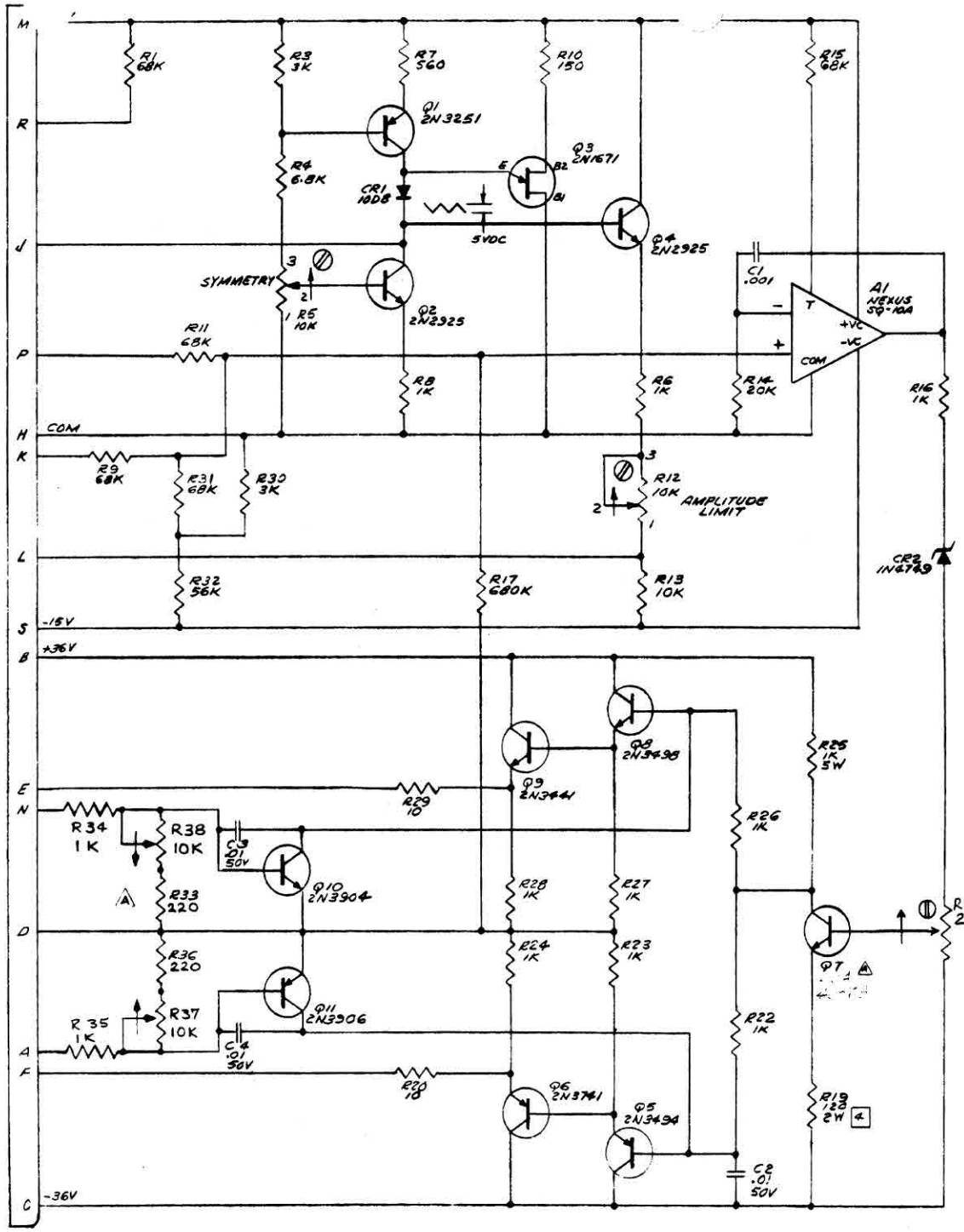

NOTES:
UNLESS OTHERWISE SPECIFIED

1. ALL RESISTORS (R) ARE ½ W, ±5% CARB COMP
2. ALL RESISTANCE SHOWN IN OHMS
3. ALL CAPACITOR VALUES IN MICROFARADS
4. R19 ALTERNATE VALUE FOR BALANCING 100Ω 2W RESISTOR
5. REFERENCE DRAWINGS:
   ARTWORK 409-4543
   FABRICATION 409-4553
   ASSEMBLY 409-4563

REV.	DESCRIPTION	BY	DATE	APPVD
C	DELETED R21(470Ω) R18(1K). Add R39 DCN #0499		6/13/74	
B	DELETED R6, R12 WAS 10K; R21 WAS 1K	FG	1/8/74	
A	ADD POTS. E37/38, PUT P39/35 IN PARAL WITH 37/38 R33 AND 36 WERE 3K	Z	9-18-73	

DO NOT SCALE DRAWING
UNLESS OTHERWISE SPECIFIED

FINISH √ | TOLERANCE XXX ± .000 ± XX ± X ± | INTER. RADII | BREAK ALL EDGES | USED ON DWG.

BERKELEY — AIRCO Temescal — CALIFORNIA
A DIVISION OF AIR REDUCTION COMPANY, INCORPORATED

DRAWN BY GAMBLE 5 9 73 | CHK BY | APP BY | SCALE NONE

A-T STANDARD CV14/8

LONG. & LAT. SWEEP P.C. BOARD SCHEMATIC (SECTION 2612 & 2613)

DRAWING NUMBER 407-4533 C

7-10-73

0101-8261-0

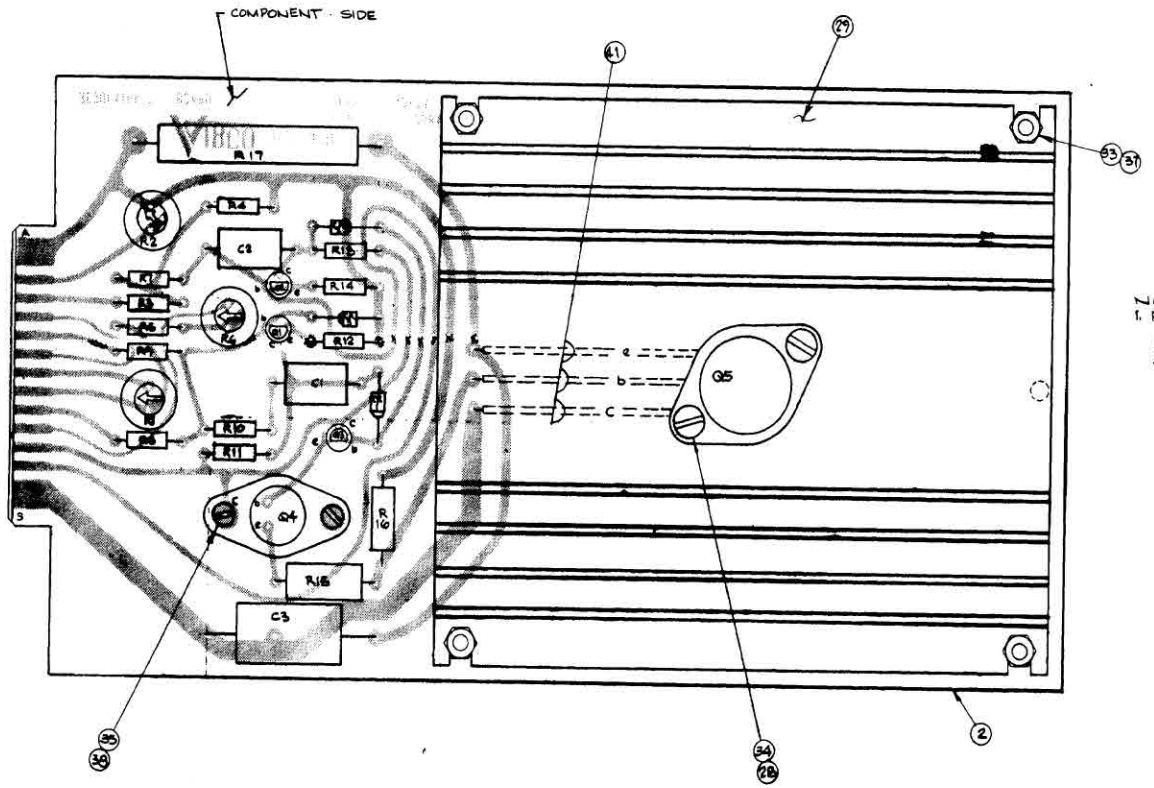

NOTES
1. REFERENCE DRAWINGS
ARTWORK — 408-2684
FABRICATION — 408-2694
SCHEMATIC - 407-1635; SHT 1 of 2

REV.	DESCRIPTION	BY	DATE	APPVD
	DO NOT SCALE DRAWING UNLESS OTHERWISE SPECIFIED			

BERKELEY AIRCO Transcoil CALIFORNIA
A DIVISION OF AIRCO, INCORPORATED

SCALE 2:1

A-T STD CV-14

REGULATOR P.C. BOARD ASSEMBLY

408-1884

0-1928-1010

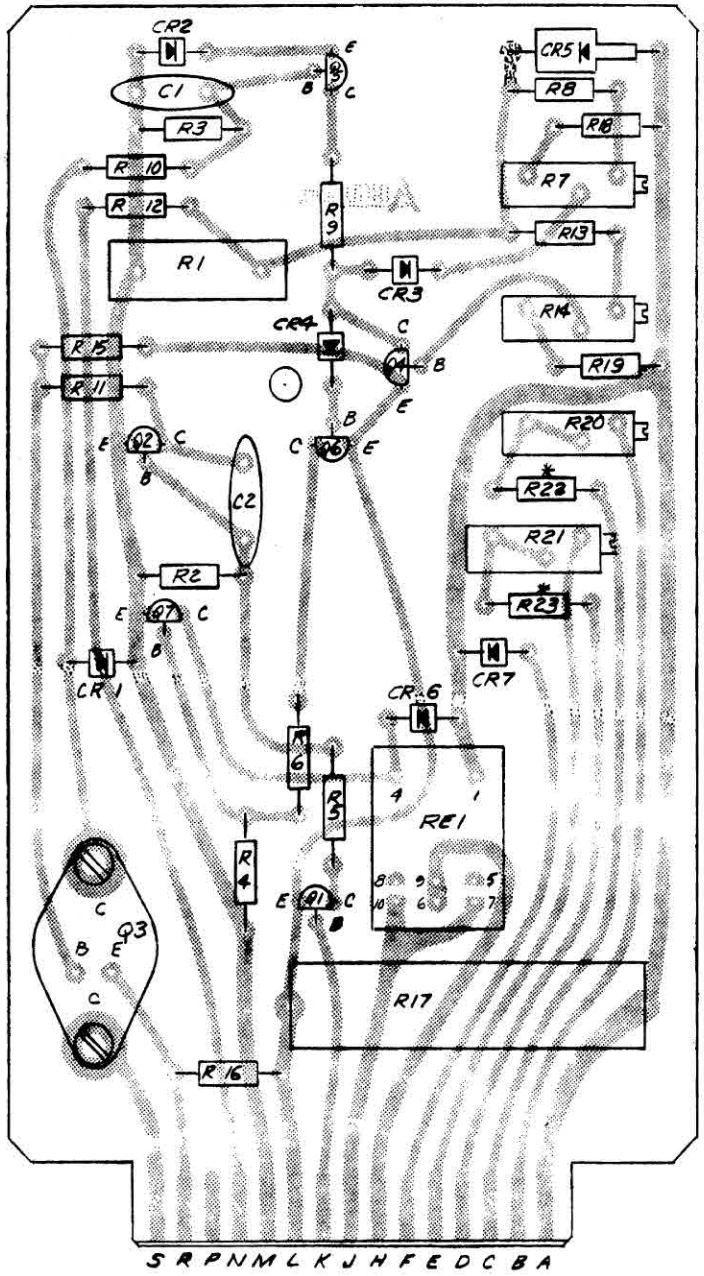

HI LIMIT INTLK ADJ.

LOW LIMIT INTLK ADJ.

LATERAL METER ADJ.

LONG. METER ADJ.

NOTES:
UNLESS OTHERWISE SPECIFIED

TRANSISTORS (EXCEPT Q3)
BEND BASE LEAD TOWARD FLAT SIDE
BEND C & E LEADS 90° FROM BASE

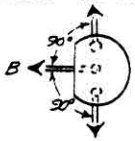

2 REFERENCE DRAWINGS:
SCHEMATIC 407-3863
FABRICATION 407-3883
ARTWORK 407-3893

* 3 DASH 1 FOR CV-14 } SEE SCHEMATIC
DASH 2 FOR CV-8 } FOR VALUE CHANGE 407-3863

REV.	DESCRIPTION	BY	DATE	APPVD
A	ADDED DASH NUMBERS	VCB.	7-20-72	

DO NOT SCALE DRAWING
UNLESS OTHERWISE SPECIFIED

FINISH | TOLERANCE XXX ± — ANG ± — XX ± X ± | INTER. RADII | BREAK ALL EDGES | USED ON DWG.

BERKELEY AIRCO Temescal CALIFORNIA
A DIVISION OF AIR REDUCTION COMPANY, INCORPORATED

DRAWN BY E. Matias | DATE 5 12 71 | CHK BY VCB | APP BY E.Y. | SCALE 2/1

A-T STANDARD CV-14/8
LONGITUDINAL FOCUS MC BOARD ASSEMBLY

DRAWING NUMBER 407 3813 | REV A

GND.

-24V

7-10-72

0101-8261-0

ITEM NO	DWG NO	DESCRIPTION	MAT'L	QTY.

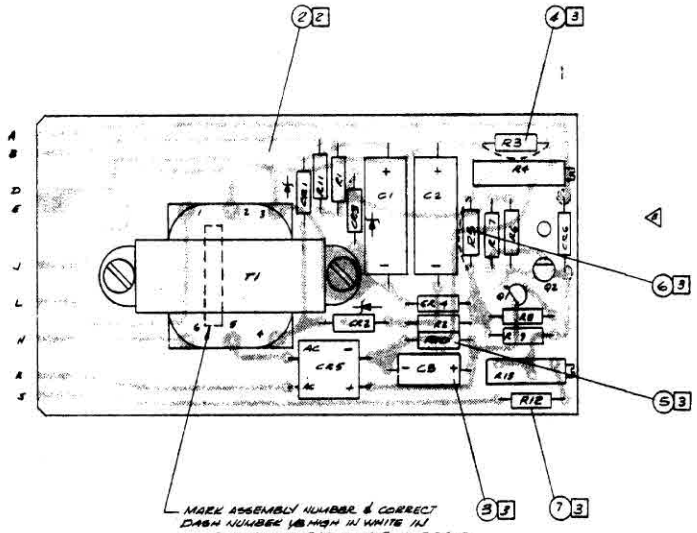

NOTES: UNLESS OTHERWISE SPECIFIED

1 SCHEMATIC DWG NO 307-4933-SHT TABULATION FOR DASH NO.

2 BASIC P.C. BOARD ASSY 90% COMPLETE

5 FOR INSTALLATION SEE TABULATION

307-1304 DASH NO. TABULATION

DASH NO	AMP RANGE	USED ON	USE B/M	WIRE ASSY	INSTALL ITEM NO 4	5	6	7	8	REF DWG NO SCHEMATIC
-0	1.2A FAST	85-6A-210	307-1300-0	307-1124 ASSY	R3	R10	JUMPER	R12	C3	307-4933-0
-1	1.2A SLOW	8GC-1/4 8GC-1/4 8GC-2 8GC-3	90%1300-1	8G-7133 (ECN) 307-3328-0 ASY 2F33354-1/4 22 GA. 2F33354-1/4 22GA.	R3	R10	JUMPER	R12	C3	307-4933-1
-2	3.0A SLOW	8GC-4/16	307-1300-2	2F33354-3/4	JUMPER	R10	R5	R12	C3	307-4933-2
-3	5.0A SLOW	SPECIAL	307-1300-3	2F33354-5 (ECN)	JUMPER	R10	R5	R12	C3	307-4933-3
-4	10.0A SLOW	SPECIAL	307-1300-4		JUMPER	R10	R5	R12	C3	307-4933-4
-5	15.0A	SPECIAL	307-1300-5		JUMPER	R10	R5	R12	C3	307-4933-5
-6	1.5A	CY14/18	307-1300-6		R3	R10	JUMPER	R12	C3	307-4933-6

REV	DESCRIPTION	BY	DATE	APPVD
B	ADDED ITEM 7, NOTES 1 & 2 AND COMPONENTS IN BASIC BD. SHADED TAB BLOCK & ADDED -5 & -6	EM	12-27-71	71.
A	REVISED TAB BLOCK	SDR	4/1/70	

SEE TABLE

BERKELEY AIRCO Temescal CALIFORNIA
A DIVISION OF AIR REDUCTION COMPANY INCORPORATED

DRAWN SDR 3/12 DATE 3/16/70 CHKD APPD

4-7 STANDARD

TRANSDUCTOR AMPLIFIER P.C. BD ASSY

307-1304 B

0101-8261-0

DASH NO.	AMPLIFIER RANGE	R3	R5	R10	R12	C3	USED ON MODEL NO.	USED ON SCHEMATIC	REF FIN. P.C. BOARD ASSY	REF BASIC P.C. BD ASSY 90% COMP.
0	1.2A	2K	JUMPER	12K	3K	.47µf 200V	ES6-210	306-9135 A703 & A703	307-1304-0	307-1293 [3]
1	1.2A	2K	JUMPER	12K	3K	1.0µf 50V	EGC-1 EGC-1A EGC-2&3	3E-7133 306-6764-01 2F-3354-1&2	↓ -1	↑
2	3.0A	JUMPER	2K	5.1K	3K	1.0µf 50V	EGC-4&5	2F-3354-3&4	-2	
3	5.0A	JUMPER	2K	3K	3K	1.0µf 50V	SPECIAL	2F-3354-5	-3	
4	10.0A	JUMPER	2K	1.5K	3K	1.0µf 50V	SPECIAL		-4	
5	15.0A	JUMPER	2K	1.0K	3K	1.0µf 50V	SPECIAL	306-6764 306-6774	-5	
6	1.5A	2K	JUMPER	12K	5.1K	.47µf 200V	CV14/8	407-1655 SECTION 2510	307-1304-6	307-1293 [3]

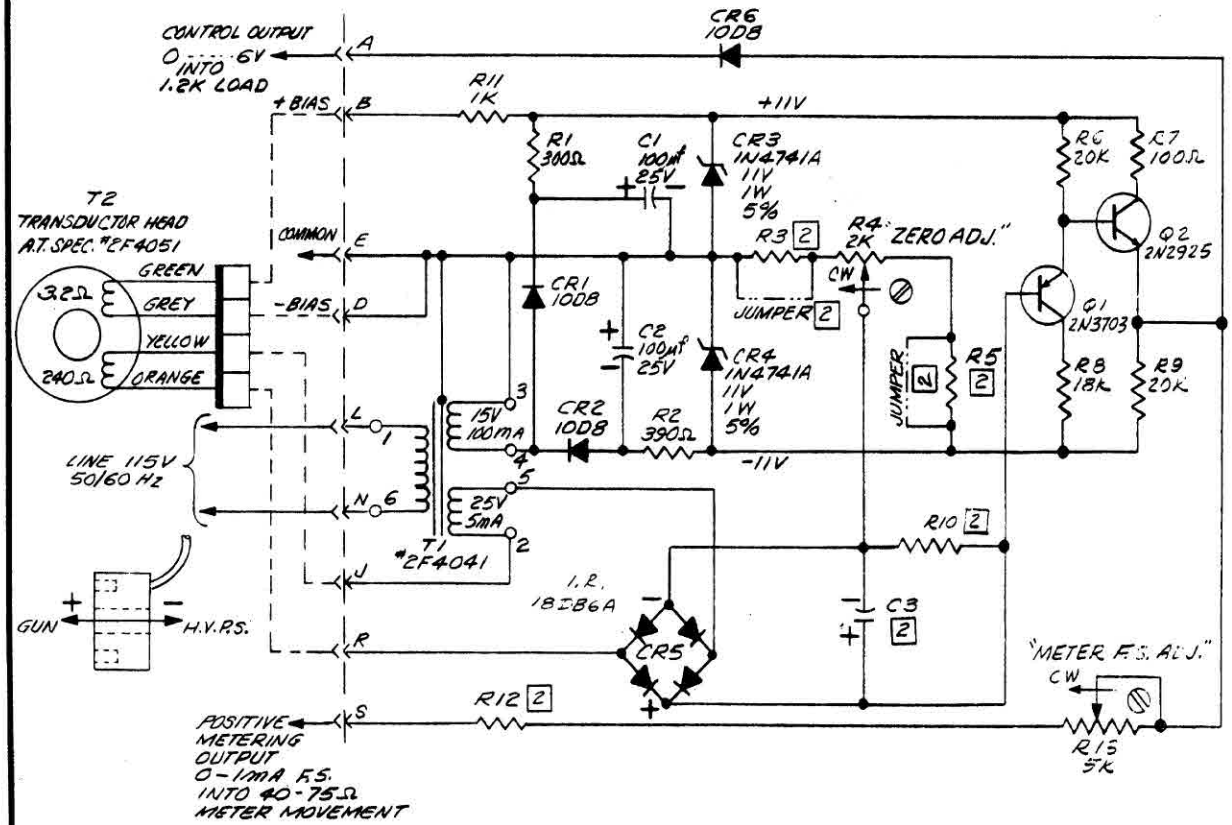

NOTES:
UNLESS OTHERWISE SPECIFIED

1 RESISTORS ARE 1/2 W, ±5% COMP CARB

[2] SEE TABULATION FOR VALUE AND/OR USE

[3] FOR BASIC P.C. BOARD ASSY 90% COMPLETE OMIT COMPONENTS R3, 5, 10, 12 & C3

[4] FOR USED ON & FINAL P.C. BD ASSY DWG. NO. SEE TABULATION

REV.	DESCRIPTION	BY	DATE	APP'D
D	I.R. 1S0B6A WAS 1N0116B3	K.G.B.	10-17-71	[illegible]
C	REDRAWN WITH CHANGES	EDM	12-22-71	[illegible]

DO NOT SCALE DRAWING
UNLESS OTHERWISE SPECIFIED

FINISH | TOLERANCE XXX ± ANG ± XX ± X ± | INTERPRET | USED ON DWG. 4

BERKELEY AIRCO Temescal CALIFORNIA
A DIVISION OF AIR REDUCTION COMPANY, INCORPORATED

DRAWN BY S.F. ROMERO DATE 8/16/72 CHK BY RJA APP BY DEC SCALE NONE

A-T STANDARD
1.2 A THRU 15 A TRANSDUCTOR AMPLIFIER SCHEMATIC

DRAWING NUMBER SIGNAL SIZE REV
3074953 D

101-8261-0

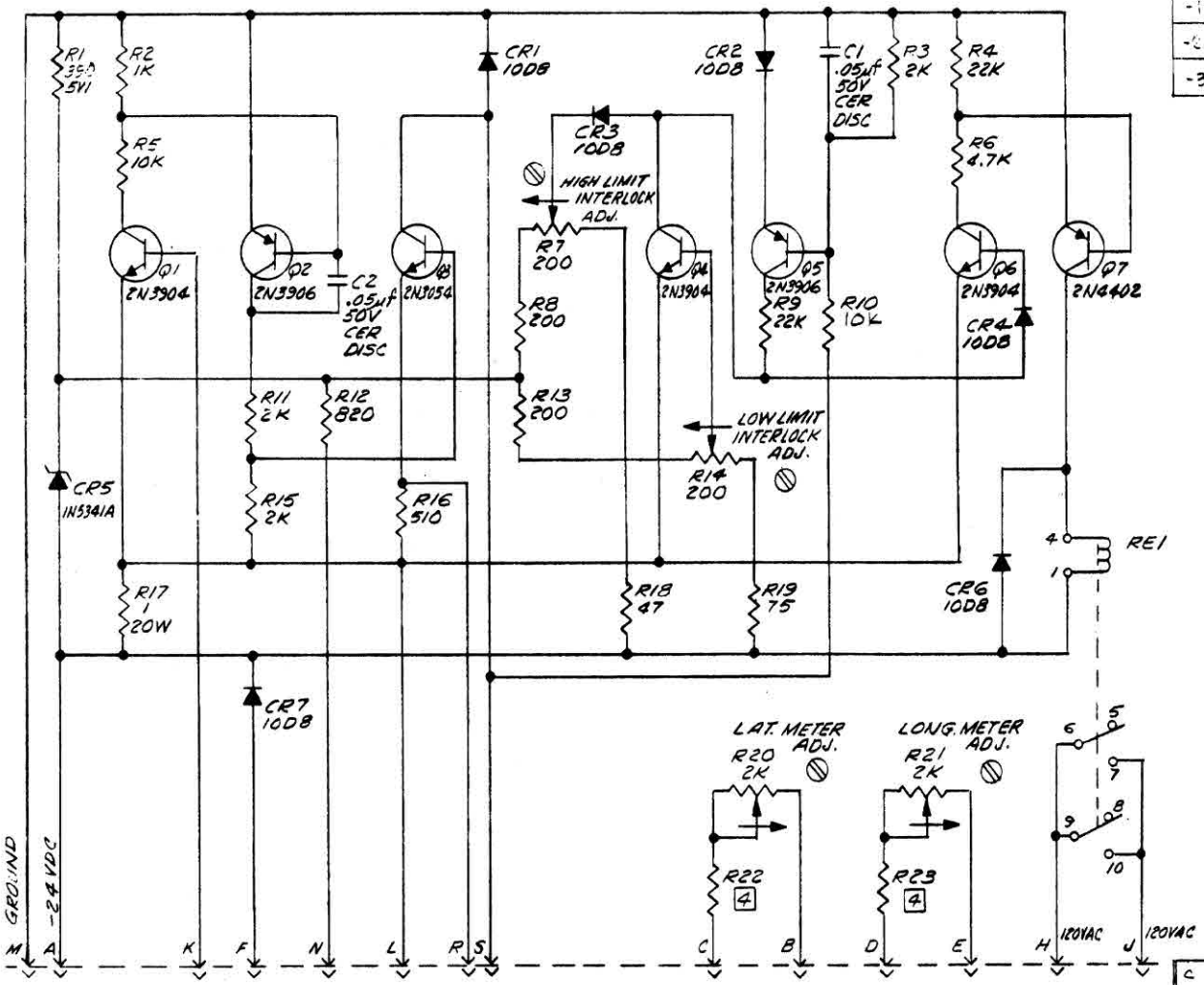

TABULATION BLOCK

DWG. NO.	R21	R22	R23	USED ON	ASSY. REF.
-1	AS SHOWN	2K	2K	CV-14	407-3873-1
-2	AS SHOWN	4.7K	4.7K	CV-8	407-3873-2
-3	REMOVE	[illegible]	4.7K	[illegible]	407-3873-3

NOTES:
UNLESS OTHERWISE SPECIFIED

1 RESISTORS ARE ½W ±5% CARB. COMP
2 RESISTOR VALUES ARE IN OHMS
3 REF. DWG. NOS.
ASSY 407-3873
FAB 407-3883
ART 407-3893
4 FOR VALUE SEE TABULATION BLOCK

REV.	DESCRIPTION	BY	DATE	APPVD
C	ADDED -3 OPTION & KIT CALLOUT	FG	11/19/73	RB
B	ADDED NOTE 4 & TABULATION BLOCK	EM	4-4-72	EY
A	R10 WAS 4.7K	FG	1-3-72	EM

DO NOT SCALE DRAWING
UNLESS OTHERWISE SPECIFIED

FINISH 7 | TOLERANCE .XXX ± .XX ANG ± .X ± | INTERPRET | USED ON DWG. 407-4015

BERKELEY AIRCO Temescal CALIFORNIA
A DIVISION OF AIR REDUCTION COMPANY, INCORPORATED

DRAWN BY E. Matias 5 12 1971 | CHK BY | APP BY | SCALE NONE

A-T STANDARD CV-14/8

LONGITUDINAL FOCUS P.C. BOARD SCHEMATIC

DRAWING NUMBER 407 3863 C

7-10

PRINTED ON DIEPO NO. 102 CLEARPRINT

0101-8261-0

DESCRIPTION	ITEM	PART NO.	SUB ASSY	QTY

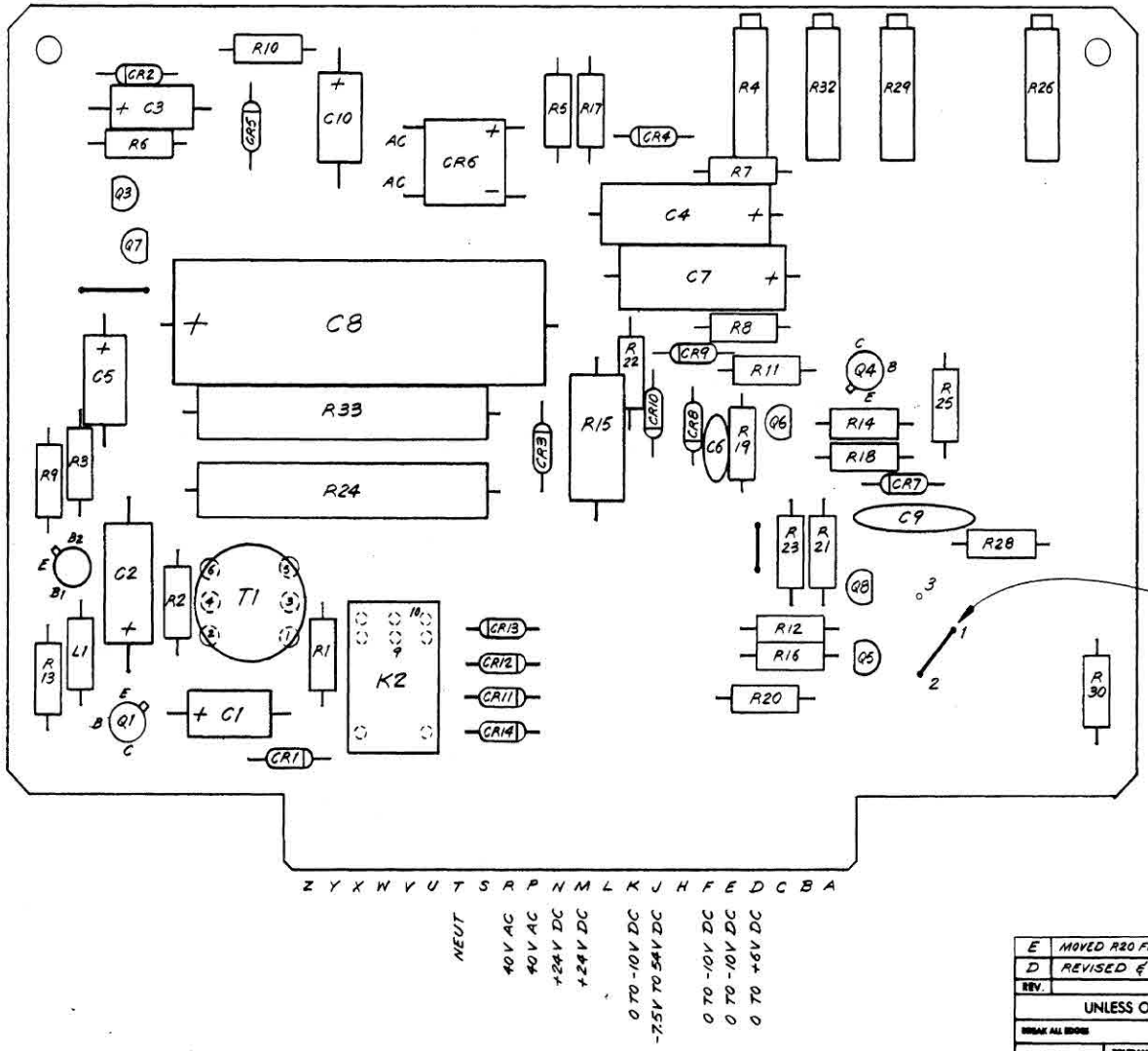

NOTES:

1. REFERENCE DRAWINGS
   SCHEMATIC 407-4034
   ARTWORK 407-4043
   FABRICATION 407-4053

WARNING MICRO FILM CHANGE CONTROL

REV.	DESCRIPTION	BY	DATE	APP'VD
E	MOVED R20 FROM PIN 'C' TO PIN 'J'; GEN. REVISION	FG	8-10-73	FS
D	REVISED & REDRAWN	FG	3-27-73	FS

UNLESS OTHERWISE SPECIFIED

BREAK ALL EDGES — INTER. RADII — USED ON DWG. NO. — DO NOT SCALE DRAWING

FINISH — TOLERANCE XXX ± ANG ± XX ± X ± — CHAMFER ENDS OF ALL SCREW THREADS 30° THREADS CLASS 2

AIRCO Temescal — A DIVISION OF AIRCO, INC. Berkeley, California

DRAWN BY F. GAMBLE — DATE 6/4/71 — CHK BY VCB — APP BY EY — SCALE 2:1

CV-14 POWER SUPPLY

GUN CONTROL P.C. CARD ASSEMBLY

DRAWING NUMBER 407-4063 — REV. E

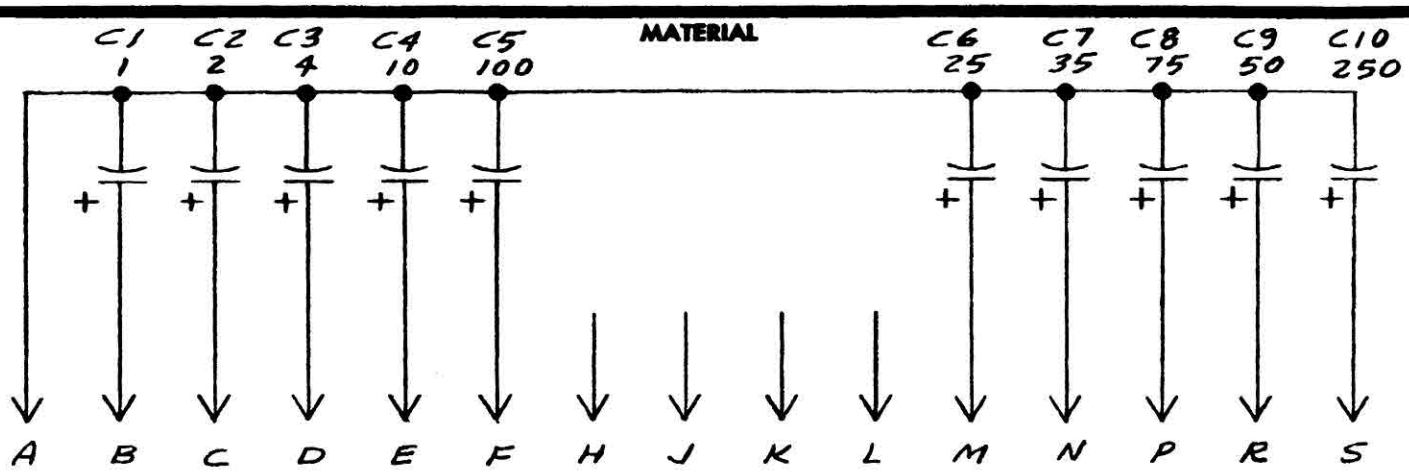

NOTES:

1. CAPACITORS ARE IN MFD. 50VOLT

2. REF. DWGS:
   ASSEMBLY 407-3983
   FABRICATION 407-3993
   ARTWORK 407-4003

REV.	DESCRIPTION	BY	DATE	APPVD
A	REDRAWN - O.M.	VCB	4-6-76	VG

DO NOT SCALE DRAWING
UNLESS OTHERWISE SPECIFIED

FINISH	TOLERANCE	INTER. RADII	USED ON DWG.
√	XXX ± ANG ± XX ± X ±	BREAK ALL EDGES	CV-14 408-0304 CV-8 408-2464

BERKELEY AIRCO Temescal CALIFORNIA
A DIVISION OF AIR REDUCTION COMPANY, INCORPORATED

DRAWN BY	DATE	CHK BY	APP BY	SCALE
V. BURGETT	4 16 76		VG	N

A-T STANDARD CV-14/8 CONTROL
CONSOLE - CAPACITOR FOCUS P.C.
BOARD - SCHEMATIC

DRAWING NUMBER: SERIAL 407-3971 SIZE REV A

ENG. REF 505-7661

0101-8261-0 CLEARPRINT

0101-8261-0

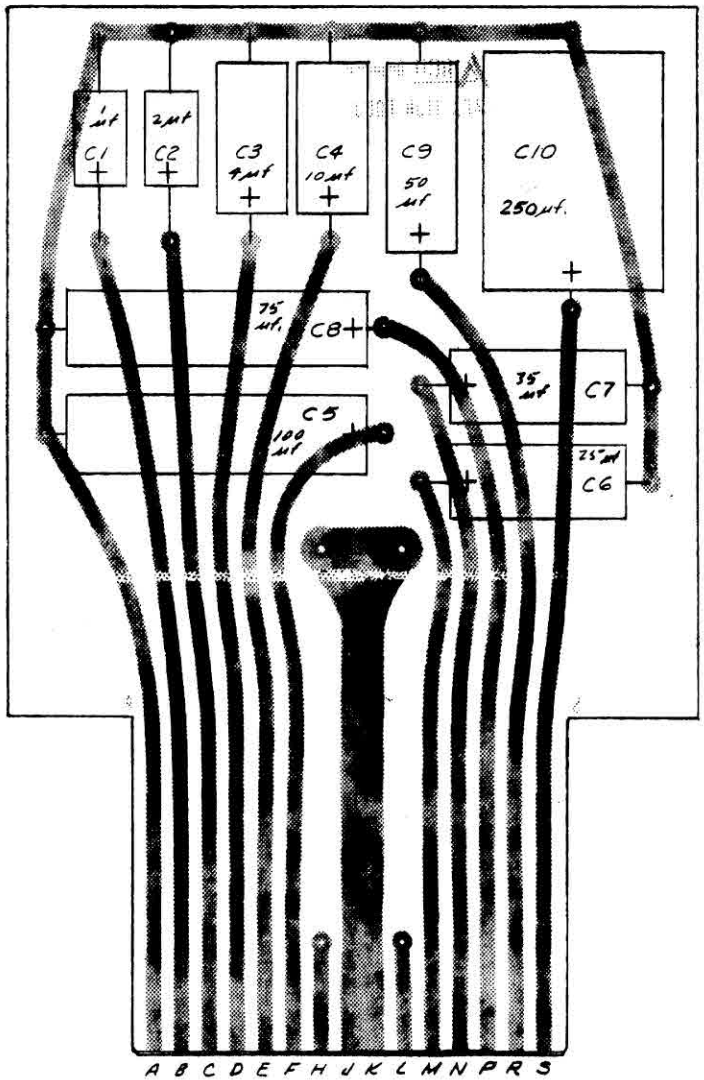

NOTES:
UNLESS OTHERWISE SPECIFIED

REFERANCE DRAWINGS
SCHEMATIC 407-3971
FABRICATION 407-3993
ARTWORK 407-4003

REV.	DESCRIPTION	BY	DATE	APPVD
A	REMOVED R1 & R2	Z	10-3-73	JA

DO NOT SCALE DRAWING
UNLESS OTHERWISE SPECIFIED

FINISH ~√ | TOLERANCE XXX ± — ANG ± — XX ± — X ± — | INTER. BADII BREAK ALL EDGES | USED ON DWG.

BERKELEY AIRCO Temescal CALIFORNIA
A DIVISION OF AIR REDUCTION COMPANY, INCORPORATED

DRAWN BY E. Matias | DATE 6.12.71 | CHK BY K.A.B. | APP BY E.Y. | SCALE 2/1

A-T STANDARD CV-14 CONTROL CONSOLE
CAPACITOR FOCUS P.C. BOARD
ASSEMBLY (SECTION 2614 & 2615)

DRAWING NUMBER SERIAL SIZE REV. 407 3983 A

7-10-75

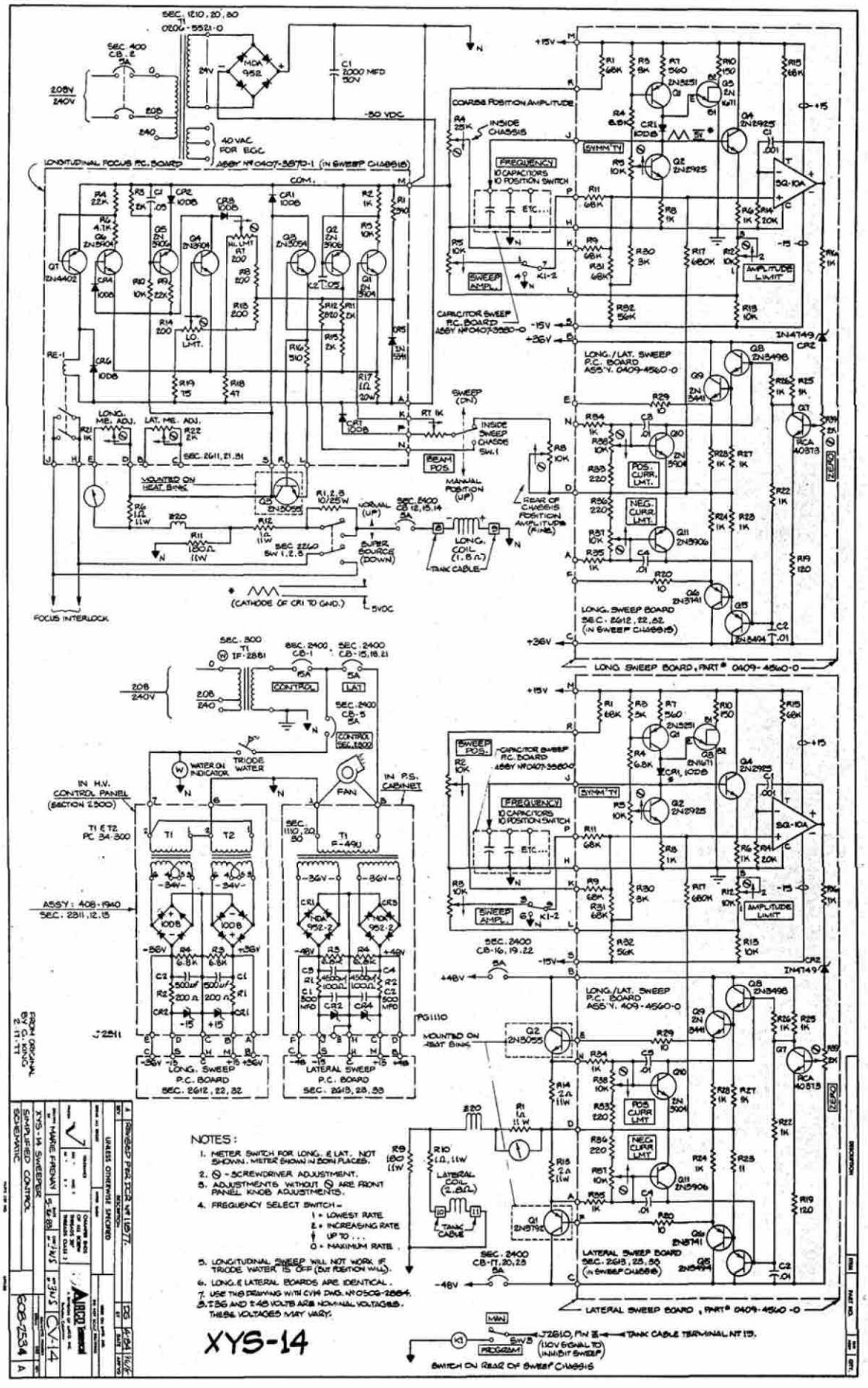
SEC. 1210, 20, 30
T1
0206-5521-0
SEC. 400
CB. 2
5A
208V
240V
MDA 952
24V
C1 2000 MFD 50V
-30 VDC
40 VAC FOR EGC
LONGITUDINAL FOCUS P.C. BOARD
ASSY Nº 0407-3870-1 (IN SWEEP CHASSIS)
COM.
FOCUS INTERLOCK
LONG. ME. ADJ.
LAT. ME. ADJ.
SEC. 2611, 21, 31
MOUNTED ON HEAT SINK
SEC. 2260
SW 1, 2, 3
NORMAL (UP)
SUPER SOURCE (DOWN)
SEC. 2400
CB. 12, 13, 14
5A
LONG. COIL (1.8Ω)
TANK CABLE
(CATHODE OF CR1 TO GND.)
5VDC
SWEEP (ON)
INSIDE SWEEP CHASSIS
SW. 1
BEAM POS.
MANUAL POSITION (UP)
REAR OF CHASSIS POSITION AMPLITUDE (KNOB)
COARSE POSITION AMPLITUDE
INSIDE CHASSIS
FREQUENCY
10 CAPACITORS 10 POSITION SWITCH
SYMM TV
SWEEP AMPL.
AMPLITUDE LIMIT
CAPACITOR SWEEP P.C. BOARD
ASSY Nº 0407-3880-0
LONG./LAT. SWEEP P.C. BOARD
ASS'Y. 0409-4560-0
POS. CURR. LMT.
NEG. CURR. LMT.
LONG. SWEEP BOARD
SEC. 2612, 22, 32
(IN SWEEP CHASSIS)
LONG. SWEEP BOARD, PART# 0409-4560-0
SEC. 300
T1
IF-2881
SEC. 2400
CB-1
15A
SEC. 2400
CB-15, 18, 21
5A
CONTROL
LAT
SEC. 2400
CB-5
5A
CONTROL SEC. 1200
TRIODE WATER
WATER ON INDICATOR
FAN
IN H.V. CONTROL PANEL (SECTION 2300)
IN P.S. CABINET
T1 & T2
PC 34-300
ASS'Y: 408-1940
SEC. 2611, 12, 15
SEC. 1110, 20, 30
T1
F-490
LONG. SWEEP P.C. BOARD
SEC. 2612, 22, 32
LATERAL SWEEP P.C. BOARD
SEC. 2613, 23, 33
PG1110
MOUNTED ON HEAT SINK
LATERAL COIL (2.8Ω)
TANK CABLE
SEC. 2400
CB-16, 19, 22
SEC. 2400
CB-17, 20, 23
5A
LATERAL SWEEP BOARD
SEC. 2613, 23, 50
(IN SWEEP CHASSIS)
LATERAL SWEEP BOARD, PART# 0409-4560-0
MAN
PROGRAM
J2610, PIN 3
TANK CABLE TERMINAL Nº 119.
(150V SIGNAL TO INHIBIT SWEEP)
SWITCH ON REAR OF SWEEP CHASSIS
NOTES:
1. METER SWITCH FOR LONG. & LAT. NOT SHOWN. METER SHOWN IN BOTH PLACES.
2. ⊖ - SCREWDRIVER ADJUSTMENT.
3. ADJUSTMENTS WITHOUT ⊖ ARE FRONT PANEL KNOB ADJUSTMENTS.
4. FREQUENCY SELECT SWITCH -
1 = LOWEST RATE
2 = INCREASING RATE
UP TO . . .
0 = MAXIMUM RATE
5. LONGITUDINAL SWEEP WILL NOT WORK IF TRIODE WATER IS OFF (DUE POSITION WILL).
6. LONG. & LATERAL BOARDS ARE IDENTICAL.
7. USE THIS DRAWING WITH CVM DWG. Nº 0506-2864.
8. 1.35 AND 2.45 VOLTS ARE NOMINAL VOLTAGES. THESE VOLTAGES MAY VARY.
XYS-14
XYS-14 SWEEPER
SIMPLIFIED CONTROL SCHEMATIC
CV-14
608-2534
A
UNLESS OTHERWISE SPECIFIED
ARCO

0101-8261-0

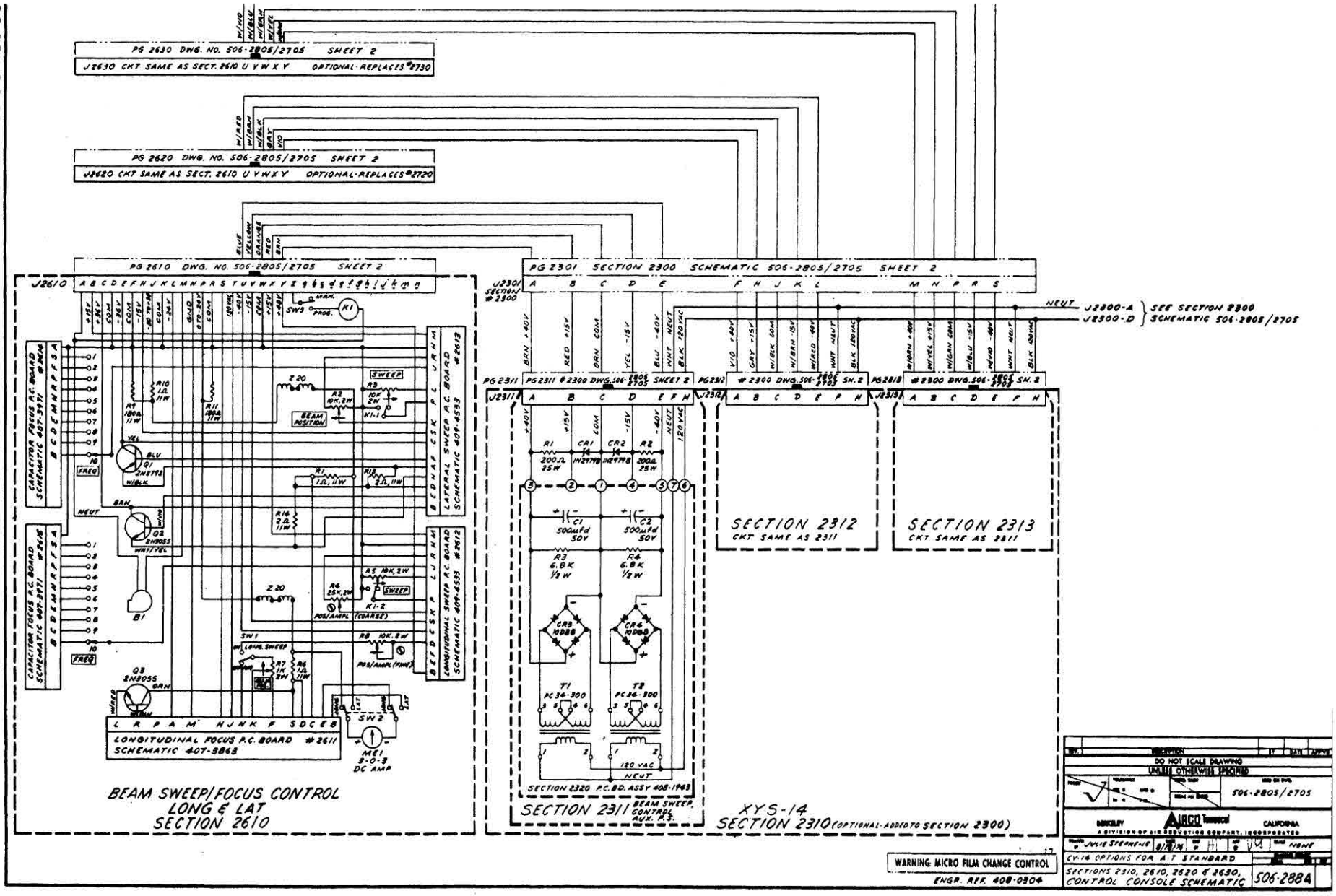
PG 2630 DWG. NO. 506-2805/2705 SHEET 2
J2630 CKT SAME AS SECT. 2610 U V W X Y OPTIONAL-REPLACES #2730
PG 2620 DWG. NO. 506-2805/2705 SHEET 2
J2620 CKT SAME AS SECT. 2610 U V W X Y OPTIONAL-REPLACES #2720
PG 2610 DWG. NO. 506-2805/2705 SHEET 2
J2610
PG 2301 SECTION 2300 SCHEMATIC 506-2805/2705 SHEET 2
J2301 SECTION #2300
NEUT
J2300-A
J2300-D
SEE SECTION 2300 SCHEMATIC 506-2805/2705
PG 2311
PG 2311 #2300 DWG. 506-2805/2705 SHEET 2
PG 2312
#2300 DWG. 506-2805/2705 SH. 2
PG 2313
#2300 DWG. 506-2805/2705 SH. 2
J2311
J2312
J2313
SECTION 2312
CKT SAME AS 2311
SECTION 2313
CKT SAME AS 2311
SECTION 2320 P.C. BD. ASSY 408-1963
SECTION 2311 BEAM SWEEP, CONTROL AUX. P.S.
XYS-14
SECTION 2310 (OPTIONAL-ADDED TO SECTION 2300)
CAPACITOR FOCUS P.C. BOARD SCHEMATIC 407-3971 #2614
LATERAL SWEEP P.C. BOARD SCHEMATIC 409-4533 #2613
LONGITUDINAL SWEEP P.C. BOARD SCHEMATIC 409-4533 #2612
LONGITUDINAL FOCUS P.C. BOARD SCHEMATIC 407-3863 #2611
BEAM SWEEP/FOCUS CONTROL
LONG & LAT
SECTION 2610
WARNING: MICRO FILM CHANGE CONTROL
ENGR. REF. 408-0304
DO NOT SCALE DRAWING
UNLESS OTHERWISE SPECIFIED
506-2805/2705
BERKELEY
AIRCO
CALIFORNIA
A DIVISION OF AIR REDUCTION COMPANY, INCORPORATED
CV-14 OPTIONS FOR A-T STANDARD
SECTIONS 2310, 2610, 2620 & 2630, CONTROL CONSOLE SCHEMATIC
506-2884

506-2705 #2 of 2

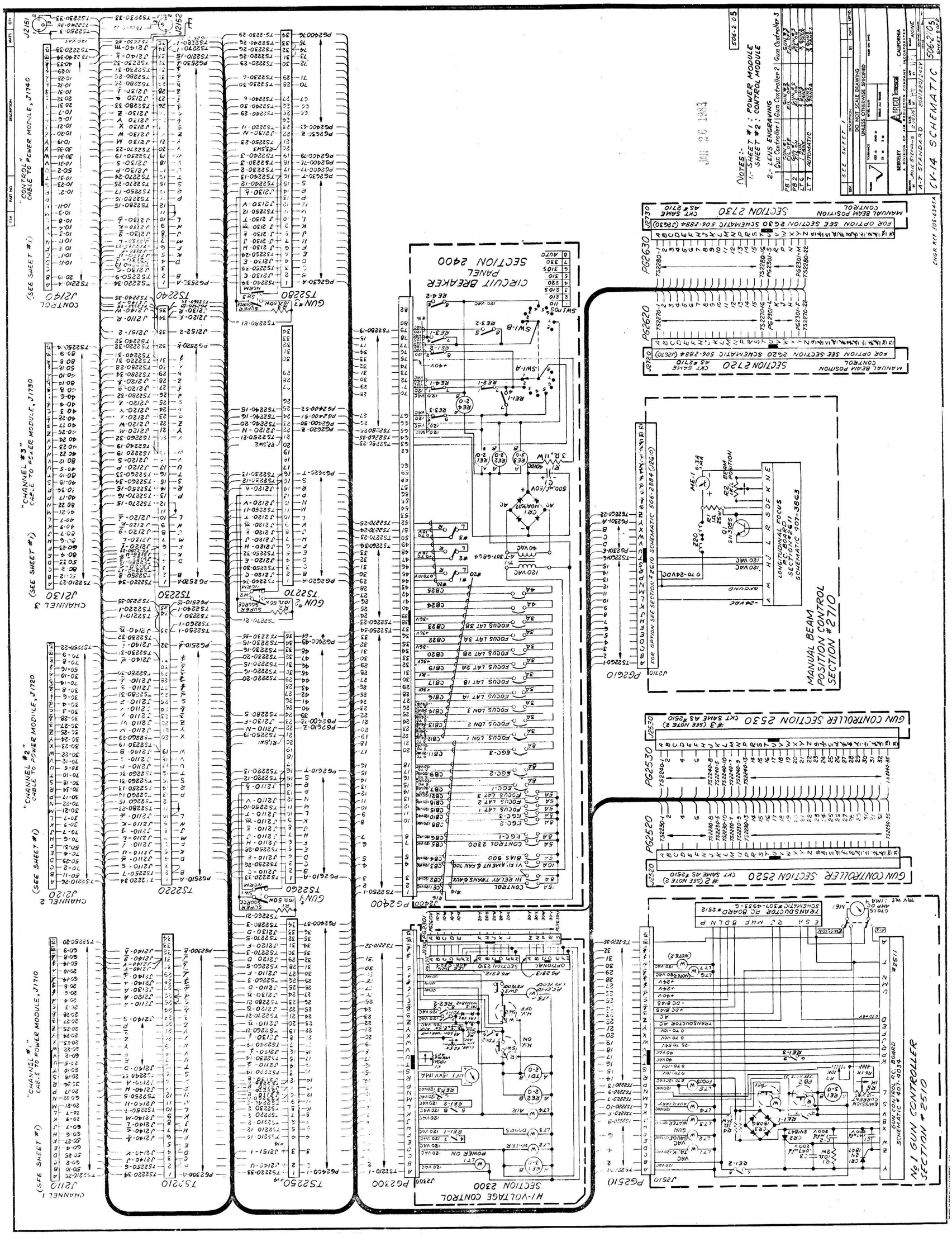

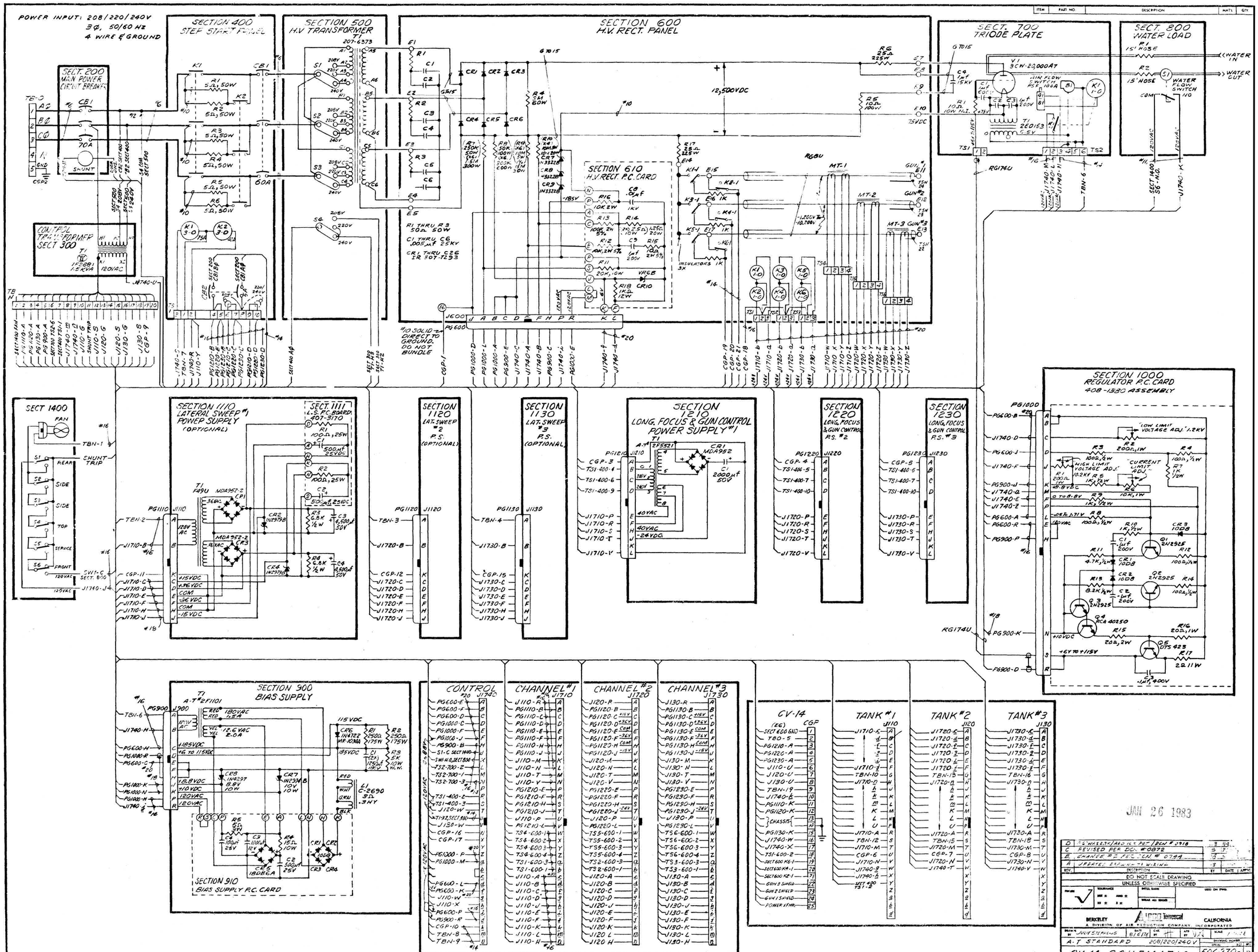
POWER INPUT: 208/220/240V
3Φ, 50/60 Hz
4 WIRE & GROUND
SECTION 200
MAIN POWER CIRCUIT BREAKER
SECTION 400
STEP START PANEL
SECTION 500
H.V. TRANSFORMER
SECTION 600
H.V. RECT. PANEL
SECTION 610
H.V. RECT. P.C. CARD
12,500VDC
SECT. 700
TRIODE PLATE
SECT. 800
WATER LOAD
WATER IN
WATER OUT
CONTROL TRANSFORMER SECT 300
SECT 1400
FAN
SHUNT TRIP
SECTION 1110
LATERAL SWEEP #1 POWER SUPPLY
(OPTIONAL)
SECTION 1120
LAT. SWEEP #2 P.S. (OPTIONAL)
SECTION 1130
LAT. SWEEP #3 P.S. (OPTIONAL)
SECTION 1210
LONG. FOCUS & GUN CONTROL POWER SUPPLY #1
SECTION 1220
LONG. FOCUS & GUN CONTROL P.S. #2
SECTION 1230
LONG. FOCUS & GUN CONTROL P.S. #3
SECTION 1000
REGULATOR P.C. CARD
408-1380 ASSEMBLY
SECTION 900
BIAS SUPPLY
SECTION 910
BIAS SUPPLY P.C. CARD
CONTROL
CHANNEL #1
CHANNEL #2
CHANNEL #3
CV-14
TANK #1
TANK #2
TANK #3
JAN 26 1983
DO NOT SCALE DRAWING
UNLESS OTHERWISE SPECIFIED
BERKELEY
CALIFORNIA
A DIVISION OF AIR REDUCTION COMPANY, INCORPORATED
A-T STANDARD 208/220/240 V
CV-14 SCHEMATIC
506-270 S
SHEET 10 OF 2
ENGR REF 505-6345 A

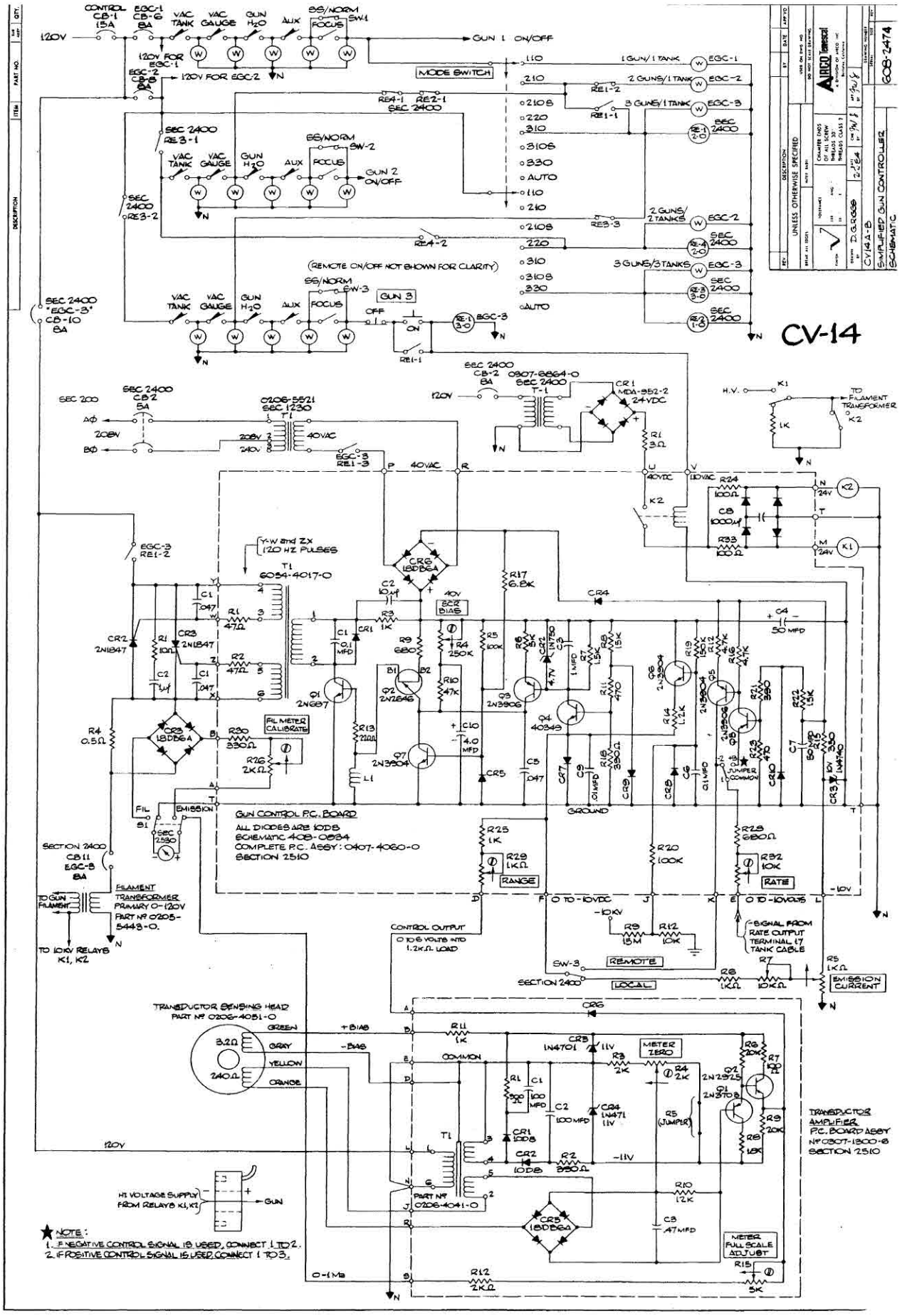
CV-14
AIRCO Temescal
SIMPLIFIED GUN CONTROLLER SCHEMATIC
608-2474
GUN CONTROL P.C. BOARD
ALL DIODES ARE 10DB
SCHEMATIC 408-0834
COMPLETE P.C. ASSY: 0407-4060-0
SECTION 2510
TRANSDUCTOR SENSING HEAD
PART Nº 0206-4051-0
TRANSDUCTOR AMPLIFIER P.C. BOARD ASSY Nº 0307-1800-8 SECTION 2510
FILAMENT TRANSFORMER PRIMARY 0-120V PART Nº 0205-5443-0.
MODE SWITCH
1 GUN/1 TANK
2 GUNS/1 TANK
3 GUNS/1 TANK
2 GUNS/2 TANKS
3 GUNS/3 TANKS
(REMOTE ON/OFF NOT SHOWN FOR CLARITY)
GUN 1 ON/OFF
GUN 2 ON/OFF
GUN 3
RANGE
RATE
REMOTE
LOCAL
EMISSION CURRENT
METER ZERO
METER FULL SCALE ADJUST
FIL METER CALIBRATE
CONTROL OUTPUT
0 TO 5 VOLTS INTO 1.2KΩ LOAD
HI VOLTAGE SUPPLY FROM RELAYS K1, K2
NOTE:
1. IF NEGATIVE CONTROL SIGNAL IS USED, CONNECT 1 TO 2.
2. IF POSITIVE CONTROL SIGNAL IS USED CONNECT 1 TO 3.

0101-8261-3