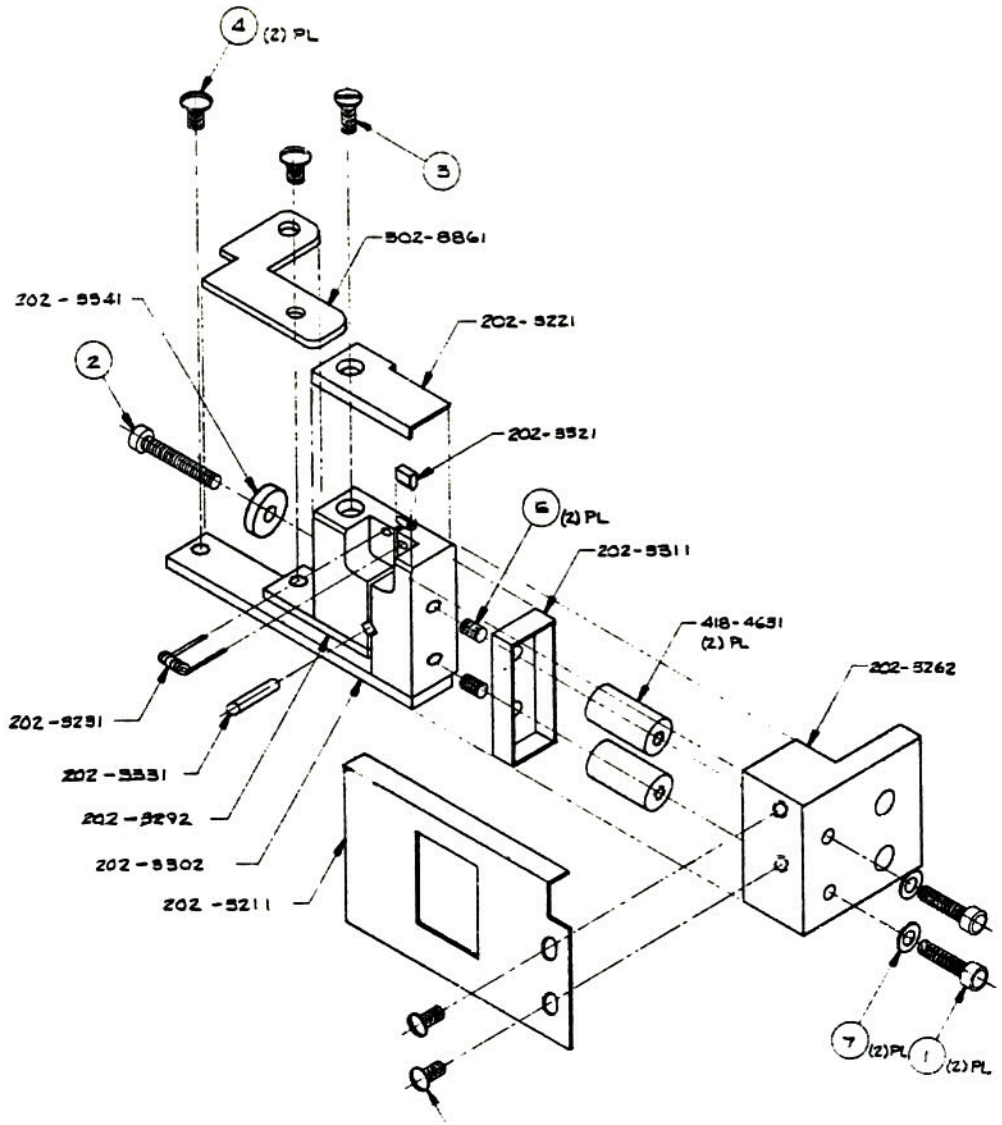

ITEM NO.	DWG. NO.	DESCRIPTION	MAT'L	QTY.
	202-3211	ANODE PLATE		1
	202-3221	BEAM FORMER		1
	202-3231	FILAMENT		1
	202-3262	MOUNTING BLOCK		1
	202-3292	LEFT CATHODE BLOCK SUB-ASS'Y.		1
	202-3302	RIGHT CATHODE BLOCK SUB-ASS'Y.		1
	202-3311	H.V. INSULATOR SHIELD		1
	202-3321	UPPER INSULATOR		1
	202-3331	LOWER INSULATOR		1
	202-3341	SCREW INSULATOR		1
	302-8861	ANGLE BRACKET		1
	418-4631	SPACING INSULATOR		2
	202-4121	FILAMENT LOCATION GAUGE		REF.
1		SCREW, SOCKET HD. CAP-#6-32NC x 5/8" LG	18-8 SST	2
2		SCREW, SOCKET HD. CAP-#6-32NC x 7/8" LG	18-8 SST	1
3		SCREW, SLOTTED ROUND HD.-#6-32NC x 1/4" LG	18-8 SST	2
4		SCREW, SLOTTED ROUND HD.-#8-32NC x 1/4" LG	18-8 SST	2
5		SCREW, SLOTTED FLAT HD.-#6-32NC x 1/4" LG	18-8 SST	1
6		SET SCREW, HEX SOCKET HD.-#6-32NC x 3/8" LG	18-8 SST	2
7		FLAT WASHER, #6	18-8 SST	2

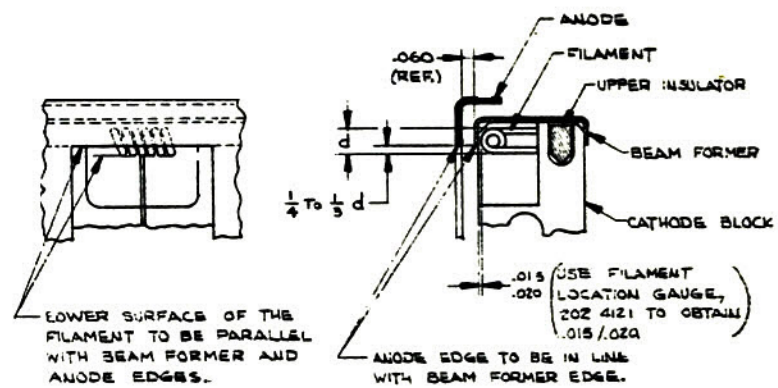

NOTE:
1- CHECK FOR FILAMENT CONTINUITY BETWEEN CATHODE BLOCKS, AND, ELECTRICAL ISOLATION BETWEEN ANODE PLATE AND CATHODE ASSEMBLY.

REV.	DESCRIPTION	BY	DATE	APP'VD
D	CHGS MADE PER ECO #00043 (ADD VIEWS DEPICTING NECESSARY FILAMENT ALIGNMENT)	RCO	12/14/70	RPF

DO NOT SCALE DRAWING
UNLESS OTHERWISE SPECIFIED

FINISH √ | TOLERANCE XXX ± AND ± XX ± X ± | INTER. RADII | BREAK ALL EDGES | USED ON DWG. 602-8374, 602-8554

BERKELEY — AIRCO Temescal — CALIFORNIA
A DIVISION OF AIR REDUCTION COMPANY, INCORPORATED

DRAWN BY R. DERRICK | DATE 12/14/70 | CHK BY FT | APP BY | SCALE NTS

FIH-270° E.B SOURCE

EMITTER ASS'Y. | DRAWING NUMBER SERIAL SIZE 302-0493 | REV D