Instruction Manual 0101-8941-4
L&SP 5430

Temescal

VersaVac® 2 • VersaVac® 5

THERMOCOUPLE/IONIZATION GAUGE

(Parts 0511-0164-0 and 0511-0164-1)

Temescal, a division of The BOC Group, Inc.
2850 Seventh Street, Berkeley, CA 94710 • Telephone: (415) 841-5720, TWX: 910-366-7366

Temescal
A division of The BOC Group, Inc.
2850 Seventh Street
Berkeley, California 94710

©1985 The BOC Group, Inc.
All rights reserved

0101-8941-4 September 1985

CONTENTS

		Page
	List of Photographs, Drawings/Parts Lists, and Figures	v
	Terms and Conditions	ix
	User Responsibility	xi
	Safety	xiii
Section		
1	DESCRIPTION AND SPECIFICATIONS	
1.1	Description	
1.1.1	General	
1.1.2	Pressure readings	
1.1.3	Pressure change	
1.1.4	System interface	
1.1.5	Process control	
1.1.6	Protection	
1.2	Specifications	
1.2.1	Input power	
1.2.2	Physical data	
1.2.3	Operating temperature	
1.2.4	Thermocouple range	
1.2.5	Ionization gauge tube range	
1.2.6	Overpressure protection	
1.2.7	Degas power	
1.2.8	Grid voltage	
1.2.9	Filament bias voltage	
1.2.10	Collector	
1.2.11	Relay output ratings	
1.2.12	Thermocouple gauge tubes	
1.2.13	Ionization gauge tubes	
2	UNPACKING AND INSTALLATION	
2.1	Unpacking	
2.2	Installation	
2.2.1	Power	
2.2.2	Thermocouple gauge tube connection	
2.2.3	Ionization gauge tube connection	
2.2.4	Set point interface connection	
2.2.5	Data interface connection	
2.2.6	Central processing unit PC board	
2.2.6.1	Ionization gauge tube type jumper	
2.2.6.2	Battery in/out jumper	
2.2.6.3	50/60-hertz jumper	

CONTENTS (continued)

Section	
3	CONTROLS AND OPERATION
3.1	Controls and Displays
3.1.1	Front panel
3.1.2	Rear panel
3.2	Analog Output Voltage Modes
3.2.1	Description
3.2.2	Changing the mode
3.2.3	Individual modes
4	CIRCUIT THEORY
4.1	Introduction
4.2	Figure 4.1: Contents
4.3	Figure 4.1: Commentary
5	THERMOCOUPLE AND IONIZATION GAUGE TUBES: OPERATING PRINCIPLES
5.1	Thermocouple Gauge Tubes
5.1.1	Operating principles
5.2	Ionization Gauge Tubes
5.2.1	Operating principles
5.2.2	Behavior at high pressure
5.2.3	Mounting
5.2.4	Degassing
5.2.5	References
6	DIAGNOSTIC MESSAGES, ADJUSTMENTS, AND CALIBRATIONS
6.1	Diagnostic Messages
6.2	Adjustments and Calibrations
6.2.1	Electrometer offset
6.2.2	Emission amplifier offset
6.2.3	Calibrating a thermocouple gauge tube
6.2.4	Ionization gauge tube type adjustment
6.2.5	Retaining set point values: battery in/out jumper
6.2.6	50/60 hertz jumper
6.2.7	Adjusting the ionization gauge tube sensitivity factor
7	PHOTOGRAPHS, DRAWINGS, AND PARTS LISTS
8	APPENDIX: RS232C INTERFACE AND VERSAVAC PROTOCOL

PHOTOGRAPHS, DRAWINGS/PARTS LISTS, AND FIGURES

Photographs (Section 7)

1	VersaVac 5 Gauge, Front Panel
2	VersaVac 5 Gauge, Rear Panel
3	VersaVac 2 Gauge, Top Cover Off
4	VersaVac 5 Gauge, Top Cover Off
5	VersaVac 2 and 5 Gauge, Bottom Cover Off

Drawings/Parts Lists (Section 7)

FINAL ASSEMBLY AND MAIN SCHEMATICS

0511-0164-B	VersaVac Gauge Final Assembly
0511-0164-0-B	VersaVac 2 Gauge Final Assembly Parts List
0511-0164-1-A	VersaVac 5 Gauge Final Assembly Parts List
0511-0174-3	Printed Circuit Board Schematics

INPUTS/OUTPUTS

0605-0243	VersaVac Rear Panel I/O Setpoint Connector
0605-0253-A	VersaVac Rear Panel I/O Data Connector

PRINTED CIRCUIT BOARD ASSEMBLIES

0511-0435-2	VersaVac CPU PC Board Assembly
0511-0435-0-2	VersaVac CPU PC Board Assembly Parts List
0511-0405-1	VersaVac 2 and 5 Power Supply PC Board Assembly
0511-0405-0-1	VersaVac 2 Power Supply PC Board Assembly Parts List
0511-0405-1-1	VersaVac 5 Power Supply PC Board Assembly Parts List

Drawings/Parts Lists (continued)

0511-0284-D	VersaVac 2 Display PC Board Assembly (sheet 1); VersaVac 5 Display PC Board Assembly (sheet 2)
0511-0284-0-D	VersaVac 2 Display PC Board Assembly Parts List
0511-0284-1-D	VersaVac 5 Display PC Board Assembly Parts List
0511-0313-1	VersaVac Electrometer PC Board Assembly
0511-0313-0-1	VersaVac Electrometer PC Board Assembly Parts List
0511-0343-C	VersaVac 2 Relay Output PC Board Assembly (Domestic) (sheet 1); VersaVac 5 Relay Output PC Board Assembly (Domestic) (sheet 2)
0511-0343-0-C	VersaVac 2 Relay Output PC Board Assembly (Domestic) Parts List
0511-0343-1-C	VersaVac 5 Relay Output PC Board Assembly (Domestic) Parts List

CABLE ASSEMBLIES (external)

0511-8542-2	VersaVac Ionization Gauge Cable Assembly
0511-8542-0-2	VersaVac Ionization Gauge Cable Assembly Parts List
0511-8552-1	VersaVac Thermocouple Cable Assembly
0511-8552-0-1	VersaVac Thermocouple Gauge Cable Assembly Parts List

INTERFACE CONNECTORS

0511-9522	VersaVac Setpoint Connector Assembly
0511-9522-0	VersaVac Setpoint Connector Assembly Parts List
0511-9532-A	VersaVac Data Connector Assembly
0511-9532-0-A	VersaVac Data Connector Assembly Parts List

IONIZATION GAUGE TUBES

0605-1172	Model 922A Ionization Gauge Tube; Model 922B Ionization Gauge Tube
0605-1182	Model 924A Ionization Gauge Tube; Model 924B Ionization Gauge Tube

OPTIONS

0511-0243	VersaVac 2 and 5 Solid State Relay PC Board Schematic

Drawings/Parts Lists (continued)

0511-0373-A	VersaVac Solid State Relay PC Board Assembly
0511-0373-0-A	VersaVac 2 Solid State Relay PC Board Assembly Parts List
0511-0373-1-A	VersaVac 5 Solid State Relay PC Board Assembly Parts List
0606-3094	RS232C Interface PC Board Schematic
0606-3123	RS232C Interface PC Board Assembly
0606-3123-0	RS232C Interface PC Board Assembly Parts List

Figures

2.1	Input Voltage Adjustment
2.2a	Thermocouple Tube Base Connection
2.2b	Ionization Gauge Tube Base Connection
2.3	Interface Methods: Solid-State Relay Board
2.4	Interface Methods: Data Connector Digital Input/Output
2.5	Interface Method: Data Connector Analog Output
2.6a	IG1/IG2 Jumper Adjustment
2.6b	Battery In/Out Jumper Adjustment
2.6c	50/60 Hertz Jumper Adjustment
3.0	Remote Selection of Ionization Gauge Tubes
3.1	Typical Analog Outputs for Data Logging (Mode 0)
3.2	Analog Voltage Output Mode 0
3.3	Analog Voltage Output Mode 1
3.4	Analog Voltage Output Modes 2-9
4.1	Block Diagrams
4.2	Circuit Functions
4.3	Filament Regulation
5.1	Thermocouple Gauge Tube (Hastings-Raydist, Model DV-6M)
5.2	Thermocouple Gauge: Operation
5.3	Thermocouple Gauge: Heat Flow
5.4	Model 924 Ionization Gauge Tube, Top View
5.5	Ionization Gauge Operation
5.6	Ionization Gauge Tube Behavior at "High" Pressures
6.1a	IG1/IG2 Jumper Adjustment
6.1b	Battery In/Out Jumper Adjustment
6.1c	50/60 Hertz Jumper Adjustment

SUMMARY OF TERMS AND CONDITIONS OF SALE

MECHANICAL WARRANTY: For a period of twelve (12) months from the date of original shipment to Purchaser thereof, the apparatus and each part or component manufactured by Temescal, a division of The BOC Group, Inc., is warranted to be free from functional defects in materials and workmanship. The foregoing warranty is subject to the condition that the apparatus, part or component be properly operated under conditions of normal use and that regular periodic maintenance and service be performed or replacements made in accordance with instructions provided by Temescal. The foregoing warranty shall not apply to any apparatus, part or component that has been repaired other than by Temescal or an authorized Temescal representative or in accordance with written instructions provided by Temescal; that has been altered by anyone other than Temescal; or that has been subject to improper installation or abuse, misuse, negligence, accident or corrosion.

Purchaser's sole and exclusive remedy under the above warranty is limited to, at Temescal's option, repair or replacement of defective parts or components or return to Purchaser of the price of the apparatus. Any such obligation on Temescal's part is subject to the following requirements: (x) the defect must be promptly reported to Temescal; (y) if so advised by Temescal, Purchaser must return the part or component with a statement of the observed deficiency not later than seven (7) days after the expiration date of the warranty to the address designated by Temescal, during normal business hours, transportation charges prepaid; and (z) upon examination by Temescal, the part or component must be found not to comply with the above warranty. Return trip transportation charges for the part or component shall be paid by Purchaser. In the event that Temescal elects to refund the purchase price, the apparatus shall be the property of Temescal and shall be promptly shipped to Temescal at Temescal's expense. This Mechanical Warranty shall be void and the apparatus shall be deemed to be purchased AS IS in the event that the entire purchase price has not been paid within thirty (30) days of original shipment of the apparatus.

THERE ARE NO EXPRESS OR IMPLIED WARRANTIES THAT EXTEND BEYOND THE WARRANTY HEREINABOVE SET FORTH. THERE IS NO WARRANTY OF MERCHANTABILITY OR FITNESS FOR A PARTICULAR PURPOSE WITH RESPECT TO THE APPARATUS OR ANY PART OR COMPONENT THEREOF AND NO WARRANTY SHALL BE IMPLIED BY LAW.

Items not of Temescal's manufacture but resold by Temescal are the products of other manufacturers and their warranty, if any, shall apply. THERE ARE NO WARRANTIES OF ANY KIND ON PRODUCTS OF OTHER MANUFACTURERS RESOLD BY TEMESCAL, EXCEPT THE WARRANTY OF TITLE, AND NO WARRANTIES SHALL BE IMPLIED BY LAW. THERE IS NO EXPRESS OR IMPLIED WARRANTY OF MERCHANTABILITY OR OF FITNESS FOR A PARTICULAR PURPOSE WITH RESPECT TO PRODUCTS OF OTHER MANUFACTURERS.

PERFORMANCE WARRANTY: Temescal warrants that the apparatus will comply with the specifications set forth in the purchase order. All specifications are subject to the corrections and tolerances allowed by the NEC. If the purchase order expressly provides for factory testing to verify compliance with the specifications, the Purchaser shall be entitled to witness the testing and the results of the testing. Upon demonstration of compliance with the specifications by factory testing, Temescal's liability for failure to comply with the specifications shall terminate. In the event that the purchase order does not describe a comprehensive test program for demonstration of compliance with the specifications, Temescal's test program (which may incorporate extrapolation of data or test results based upon similarity of criteria established by Temescal) shall be used for such purpose.

If the purchase order does not expressly provide for factory testing, compliance with the specifications shall be demonstrated by field testing which shall be conducted by Purchaser at Purchaser's expense. Temescal shall have the right to: (a) witness the field testing and to verify the results of such field testing; (b) have free access to all data compiled by the Purchaser in connection with any field test; and (c) conduct its own field test at its own expense during any 14-day consecutive period which may be mutually agreed upon by Temescal and the Purchaser; provided, however, that Temescal shall have the right to field test within six months of receipt from the Purchaser of any notice of failure to comply with the specifications. If compliance with the specifications is to be demonstrated by field testing, the Purchaser shall conduct and complete all field testing within sixty (60) days of the original shipment of the apparatus and shall promptly notify Temescal of any failure to comply with the specifications. Temescal shall not be liable for any failure to comply with the specifications demonstrated by field testing unless it receives notice thereof within sixty-seven (67) days of the date of original shipment of the apparatus.

In the event that factory testing or field testing does not demonstrate compliance with the specifications, the Purshaser's sole and exclusive remedy under the above warranty is limited to, at Temescal's option, repair or replacement of defective parts or components or return to the Purchaser of the purchase price of the apparatus. In the event that Temescal elects to refund the purchase price, the apparatus shall be the property of Temescal.

Any obligations on Temescal's part under this Performance Warranty are subject to the following requirements: (x) the nature of the failure of the apparatus to comply with the specifications must be promptly reported to Temescal in writing; (y) if the apparatus has been delivered and field tested, the Purchaser must return the apparatus or any part or component to Temescal upon its request, not later than sixty-seven (67) days after initial shipment to Purchaser, to the address designated by Temescal, during normal business hours, transportation charges prepaid; and (z) upon examination and testing by Temescal, the apparatus must be found not to comply with the specifications. Return trip transportation charges for the apparatus or any part or component shall be paid by the Purchaser. This Performance Warranty shall be void and the apparatus shall be deemed to be purchased AS IS in the event that the entire purchase price has not been paid within thirty (30) days of original shipment of the apparatus.

THERE ARE NO EXPRESS OR IMPLIED WARRANTIES THAT EXTEND BEYOND THE WARRANTY HEREINABOVE SET FORTH. THERE IS NO WARRANTY OF MERCHANTABILITY OR FITNESS FOR A PARTICULAR PURPOSE WITH RESPECT TO THE APPARATUS OR ANY PART OR COMPONENT THEREOF AND NO WARRANTY SHALL BE IMPLIED BY LAW.

DISCLAIMER OF LIABILITY: IN NO EVENT SHALL TEMESCAL BE LIABLE FOR DIRECT, INDIRECT, SPECIAL, INCIDENTAL, OR CONSEQUENTIAL DAMAGES, ARISING FROM ANY SOURCE such as, but not limited to, the manufacture, use, delivery (including late delivery) or transportation of any apparatus, part or component sold to Purchaser, whether such damages are caused by Temescal's negligence or otherwise. Without limiting the generality of the foregoing sentence, Temescal shall not be liable for: the cost of capital; the cost of substitute apparatus, services, repairs, components or parts; loss of profit or revenue; the cost of power whether purchased or produced by the consumer thereof; loss of use of the apparatus or any part thereof, or any other property owned by Purchaser; claims or costs of Purchaser's customers; injury to persons or death; or damages to any property. In the event that any limited warranty or disclaimer of liability is found to be unlawful or inapplicable, or to have failed of its essential purpose, Temescal's liability shall be limited to the amount paid by Purchaser for the apparatus.

Temescal Semiconductor Products
Temescal, a division of The BOC Group, Inc.
2850 Seventh Street, Berkeley, CA 94710 • Telephone: (415) 841-5720, TWX: 910-366-7366

USER RESPONSIBILITY

This equipment will perform in accordance with the instructions and information contained in this manual, and its referenced documents, when such equipment is installed, operated, and maintained in compliance with such instructions. The equipment must be checked periodically. Defective equipment shall not be used. Parts that are broken, missing, plainly worn, distorted, or contaminated, shall be replaced immediately. Should such repair or replacement become necessary, Temescal recommends that a telephonic or written request for service be made to Temescal.

The equipment, or any of its parts, shall not be altered without the prior written approval of Temescal. The user and/or purchaser of this equipment shall have the sole responsibility for any malfunction which results from improper use, faulty maintenance, damage, improper repair or alteration by any party other than Temescal.

SAFETY

All standard safety procedures associated with the safe handling of electricity must be observed. Always disconnect power when working inside a VersaVac gauge. Only trained personnel should attempt to service the instrument.

SECTION 1

DESCRIPTION AND SPECIFICATIONS

1.1 DESCRIPTION

1.1.1 General

Microprocessor control enables the VersaVac® 2 and the VersaVac 5 thermocouple/ionization gauges to combine continuous thermocouple and ionization gauge readings with complete front-panel control in a single modular unit. Dual-unit measurement (torr and pascal), versatile system interface, and accessible process-control features are standard in both gauges. The module is suited to mounting in a standard 19-in. rack.

The VersaVac 5 gauge accommodates as many as 5 thermocouple gauge tubes with a total of 7 programmable thermocouple set points. The VersaVac 2 gauge, suited to less complex systems, accommodates as many as 2 thermocouple gauge tubes with a total of 4 programmable thermocouple set points. Both VersaVac models accommodate up to 2 ionization gauge tubes and 4 programmable ionization gauge set points each.

1.1.2 Pressure Readings

Thermocouple gauge pressure readings are displayed on 2 front-panel bar graphs in microns and pascal simultaneously.

Ionization gauge readings are digitally displayed, one at a time, in torr and pascal (switch-selected). The digital readouts are updated every 500 milliseconds.

For accuracy in reading ionization gauge pressures, the sensitivity of the installed ionization gauge tubes can be programmed by means of front-panel controls to accommodate the measuring of gas species other than nitrogen.

1.1.3 Pressure Change

The direction of any ionization gauge pressure change (decreasing/increasing) is indicated immediately by illumination of a front-panel LED. The operator can display the rate of change in ionization gauge pressure by pushing a front-panel switch. (The rate of change can be used, for example, to identify pumpdown rate and to aid leak-detection).

1.1.4 System Interface

The VersaVac gauges provide an analog output and BCD (binary-coded decimal) outputs of ionization gauge pressure for system interface (for such uses as data-logging and automatic ionization-gauge pressure control). The analog output voltage can be programmed by front-panel controls for any of 10 pressure-range modes. (Only 1 analog output mode can be selected at a time.) All thermocouple gauge and ionization gauge set points have outputs for equipment and process interlocks.

1.1.5 Process Control

Both thermocouple and ionization gauge set points can be adjusted individually at any time by front-panel controls. Once established, set-point values are protected by a keylock switch. Set-point values can be displayed at any time.

1.1.6 Protection

If the vacuum system exceeds a programmed rate-of-change (increase) set point, the VersaVac gauge gives both a visual signal (a flashing light) and an output signal, available on the rear-panel data connector.

Overpressure trip points protect ionization gauge filaments.

The VersaVac gauges continuously self-test. In the event of fatal internal errors, the microprocessor clears all outputs to a safe mode,

1.1.6 (continued)

shows a diagnostic message on the front-panel digital display, and stops operating. In the event of a nonfatal error related to the active ionization gauge tube (either within the gauge or external to it), the microprocessor sends a diagnostic message to the front-panel display and switches off the ionization gauge tube filament. The message identifies the troubled area. Re-energizing the filament will clear the diagnostic message. If a problem still exists, however, the diagnostic message will repeat.

1.2 SPECIFICATIONS

1.2.1 Input Power

180 watts; 100/120/220/240 volts, user-selectable; 50/60 hertz, user-selectable

1.2.2 Physical Data

Height:	3.5 in. (89 mm)	
Width:	19 in. (485 mm)	
Depth:	16 in. (406 mm),	without connectors
	20 in. (508 mm),	with connectors
Weight:	19 lb (8.6 kg)	

1.2.3 Operating Temperature

59 to 95 degrees F/15 to 35 degrees C

1.2.4 Thermocouple Gauge Range

1 to 1000 microns (0.133 to 133 pascal)

1.2.5 Ionization Gauge Tube Range

Type 924: 1×10^{-9} to 9.9×10^{-4} torr (1.3×10^{-7} to 1.3×10^{-1} pascal)

Type 922: 1×10^{-9} to 9.9×10^{-2} torr (1.3×10^{-7} to 13×10^{0} pascal)

1.2.6 Overpressure Protection

Type 924 ionization gauge tube: 9.9×10^{-4} torr (1.3×10^{-1} pascal)

Type 922 ionization gauge tube: 9.9×10^{-2} torr (13×10^{0} pascal)

1.2.7 Degas Power

50 watts, nominal (resistive load)

1.2.8 Grid Voltage

180 volts, dc

1.2.9 Filament Bias Voltage

30 volts, dc

1.2.10 Collector

Virtual ground

1.2.11 Set Point Connector Relay Output Ratings

a) Standard
2 amperes:* 26 volts dc, C, NO, and NC;
0.5 ampere:* 115 volts ac, C, NO, and NC

b) Solid-state relay PC board option
240 volts ac, 1 ampere*

1.2.12 Thermocouple Gauge Tubes

Hastings-Raydist, Model DV-6M, 1/8 in. NPT octal socket

*Maximum current ratings

1.2.13 Ionization Gauge Tubes

1.2.13.1 Model 924A. standard; 0.75-in. outside diameter Kovar tubulation; platinum-coated bulb; thoria coated iridium filament; range: 1.0×10^{-9} to 9.9×10^{-4} torr (1.3×10^{-7} to 1.3×10^{-1} pascal); 4-pin in-line configuration; sensitivity: 11 $torr^{-1}$ for nitrogen

1.2.13.2 Model 924B. standard; 1-in. outside diameter Kovar tubulation; platinum-coated bulb; iridium filament; range: 1.0×10^{-9} to 9.9×10^{-4} torr (1.3×10^{-7} to 1.3×10^{-1} pascal); 4-pin in-line configuration; sensitivity: 11 $torr^{-1}$ for nitrogen

1.2.13.3 Model 922B. high-pressure; 1-in. outside diameter Kovar tubulation; platinum-coated bulb; iridium filament; range: 1.0×10^{-9} to 9.9×10^{-2} torr (1.3×10^{-7} to 13×10^{0} pascal); 5-pin configuration; sensitivity: 10 $torr^{-1}$ for nitrogen

SECTION 2

UNPACKING AND INSTALLATION

2.1 UNPACKING

The equipment described in this manual was released to the carrier in good condition and properly packed. It is essential to all concerned that the contents of the shipment be examined carefully when unpacked to assure that no damage occurred in transit.

First check the material received against the packing list, to be certain that all elements are accounted for. Then check each element for damage.

NOTE

The VersaVac thermocouple/ionization gauge controller is shipped in a package with the set-point and data connectors, the ac line cord, and the program keys. Items ordered individually, such as thermocouple and ionization gauge tubes and cables, may be packaged separately.

If there is loss or damage:

a) Notify the carrier or the carrier's agent to request inspection of the loss or damage claimed.

b) Keep shipping containers until it is determined whether they are needed to return the equipment to Temescal.

2.2 INSTALLATION

2.2.1 Power

DANGER

The VersaVac controller contains high voltage, both inside and at the rear-panel ionization gauge tube octal connectors. Before connecting the cables and before attempting to service the module, switch the front-panel POWER rocker switch off. Otherwise, personnel and equipment may be endangered.

a) CAUTION

Before applying power to the unit, set the operating voltage of the VersaVac gauge for the system input line voltage value.

NOTE

Typically, operating voltage is preset at the factory for a nominal input of 120 volts.

To change the operating voltage or to ascertain the selected voltage, remove the input power cable from the rear of the controller (if it is installed), and reorient the voltage selection PC board as shown in figure 2.1.

b) Make sure the input power fuse is the appropriate value, as indicated below.

100/120 volts input power: 3 amperes
220/240 volts input power: 1.5 amperes

c) DANGER

Make sure the front-panel POWER rocker switch is still off.

Install the input power cable in the rear-panel connector.

Figure 2.1 Input voltage adjustment

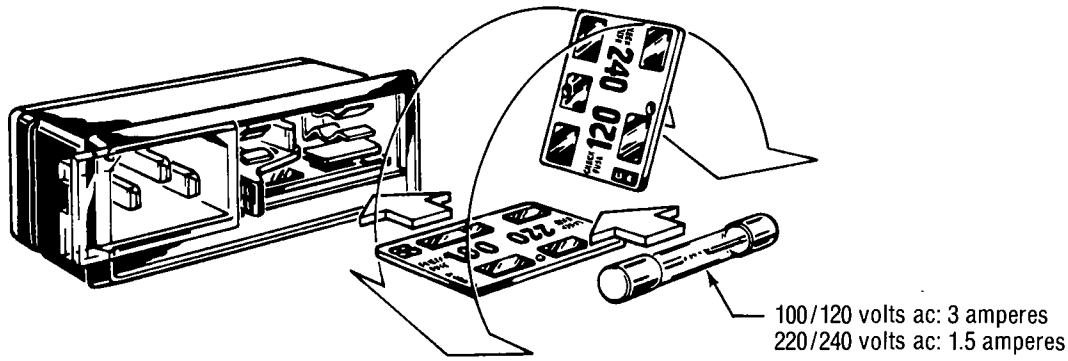

Operating voltage is shown in VS&F Connector window.

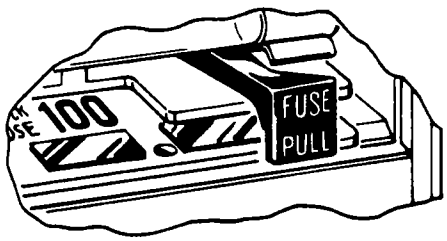

HOW TO SELECT OPERATING VOLTAGE

1. Open cover door and rotate fuse-pull to left.
2. Select operating voltage by orienting PC Board to position desired voltage on top left side. Push board firmly into module slot.
3. Rotate fuse-pull back into normal position and re-insert fuse into holders, using caution to select correct fuse value.

d) Plug the free end of the input power cable into the power source.

2.2.2 Thermocouple Gauge Tube Connection

a) With the front-panel POWER rocker switch still off, install the thermocouple gauge tube(s) in the vacuum system.

NOTE

Always install thermocouple gauge tubes base upward, to minimize internal collection of contaminants.

b) Connect the 5-pin miniature amphenol connector, located at one end of the thermocouple cable, to the corresponding thermocouple plug on the rear panel of the VersaVac gauge. Rotate the plug to lock it into the socket connector.

c) Plug the octal end of the cable into the corresponding thermocouple tube (figure 2.2a).

CAUTION

To make the connection correctly, plug the cables into the octal sockets according to the keyway. Do not force them, or they may break.

2.2.3 Ionization Gauge Tube Connection

a) With the front-panel POWER rocker switch off, check the installation of the ionization gauge tubes in the system.

CAUTION

Ionization gauge tubes should be mounted vertically. In sputtering or other glow-discharge systems, the ports must be shielded with stainless-steel wire mesh screen and the shields grounded, to prevent stray ions from entering the tubes. Otherwise, pressure readings may become erratic. (See section 5.2.3.)

Figure 2.2a Thermocouple gauge tube (Model DV-6M) base connection

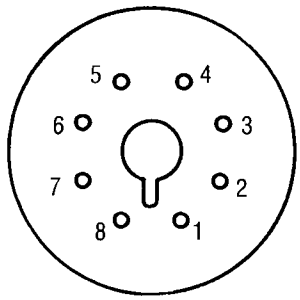

pin 3: heater
pin 5: heater
pin 7: thermocouple

Figure 2.2b Ionization gauge tube (Models 922 and 924) base connection

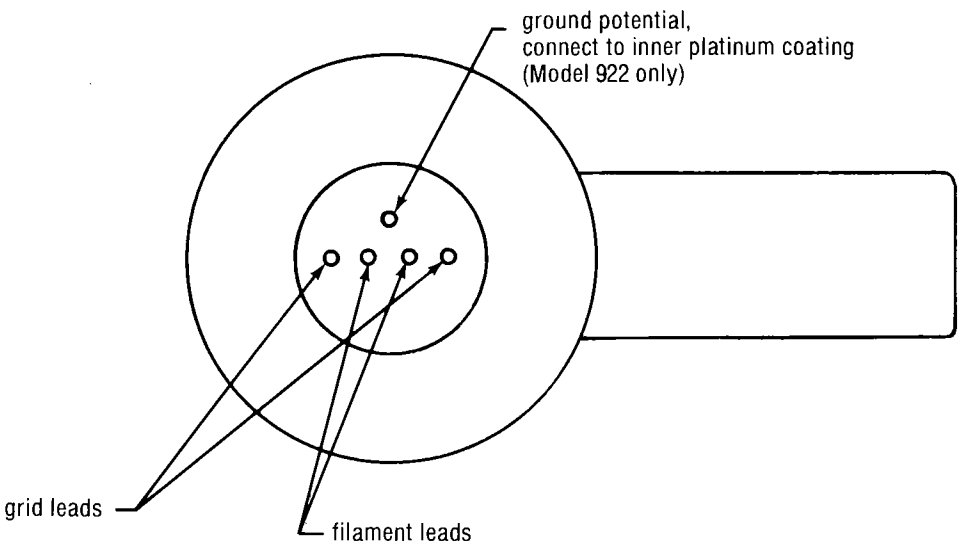

2.2.3 (continued)

b) Plug the ionization gauge cable into the base of the ionization gauge tube, as indicated in figure 2.2b.

c) Connect the collector input of the cable to the collector pin, located at the top of the tube.

d) Plug the free end of the cable into the associated (IG1/IG2) BNC connector and octal connector socket, located on the rear panel of the unit.

2.2.4 Set Point Interface Connection (drawings 605-0243 and 511-0243)

Use the 22-pin SET POINT CONNECTOR (supplied), located on the rear panel of the unit, to wire the contacts to be used by your vacuum system, according to drawing 605-0243 (standard relay PC board) or drawing 511-0243 (optional solid-state relay PC board).

CAUTION

The SET POINT CONNECTOR is keyed at the factory for mating with the standard relay board. If the solid-state relay board is to be used, the SET POINT CONNECTOR must be keyed for the solid-state relay board interface as described below.

In the VersaVac 5 gauge the SET POINT CONNECTOR provides 10 outputs; in the VersaVac 2 gauge the SET POINT CONNECTOR provides 7 outputs.

2.2.4 (continued)

The outputs are listed below.

TC1 at or below set point 1

TC2 at or below set point 2

TC2 at or below set point 1

TC2 at or below set point 2

*TC3 at or below set point

*TC4 at or below set point

*TC5 at or below set point

Ionization gauge tube 1 filament is on

Ionization gauge at or below set point 1

Ionization gauge at or below set point 2

The standard relay PC board provides common, normally closed, and normally open contacts for each output. The optional solid-state relay PC board accommodates the same 10 set point outputs, but for interface to 240-volt ac circuits (figure 2.3). Each output on the solid-state relay board is a contact closure (Triac output) when the particular set point is true. The solid-state relays, which behave like normally open contacts, are represented in drawing 511-0243; the edge connector configuration is detailed below. PC board LED illuminate to indicate which set points are made.

*VersaVac 5 gauge only.

Figure 2.3 Interface methods: solid-state relay board

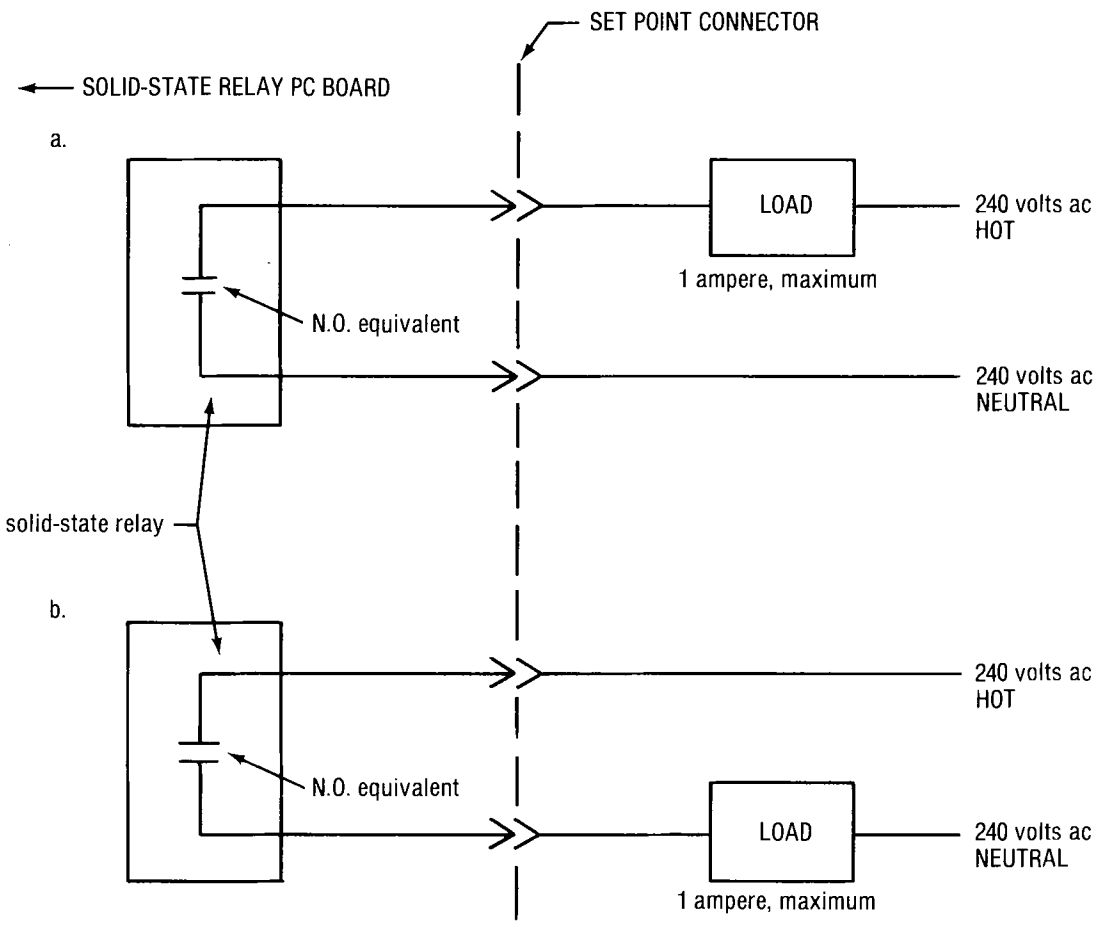

2.2.4 (continued)

SET POINT CONNECTOR Pins	Output
2,B	TC1 at or below set point 1
4,D	TC1 at or below set point 2
6,F	TC2 at or below set point 1
8,J	TC2 at or below set point 2
*10,L	TC3 at or below set point
*12,N	TC4 at or below set point
*14,R	TC5 at or below set point
16,T	Ionization gauge tube 1 filament is on
18,V	Ionization gauge at or below set point 1
20,X	Ionization gauge at or below set point 2

NOTE

In the standard VersaVac gauge relay board, all contacts are rated 0.5 ampere at 115 volts and 2 amperes at 28 volts. The optional solid-state relays are rated 240 volts ac at 1 ampere.

*VersaVac 5 only.

2.2.4 (continued)

To key the SET POINT CONNECTOR for the solid-state relay PC board, manually remove the 2 polarizing keys from the standard positions between pins 3 and 4 and between pins 18 and 19, and install one key between pins 2 and 3 and the other key between pins 19 and 20, as represented in the diagram below.

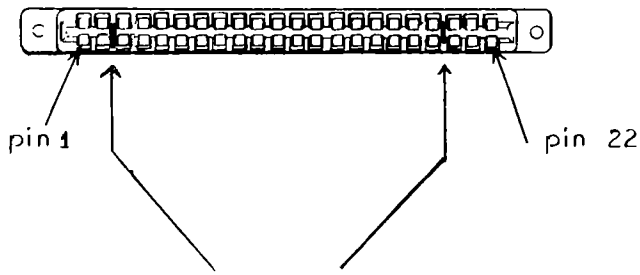

install polarizing keys
between pins 2 and 3 and
between pins 19 and 20

2.2.5 Data Interface Connection (drawing 605-0253)

Use the 22-pin DATA CONNECTOR (supplied), located on the rear panel of the unit, to connect the input/output signals used by your vacuum system, according to drawing 605-0253. Pin functions are listed below.

DATA CONNECTOR Pins	Input/Output
1,A	analog pressure output: This 0- to 10- volts dc signal, relating to the active ionization gauge tube pressure, is governed by the selected analog output voltage mode (0 to 9).

(continued)

2.2.5 (continued)

DATA CONNECTOR Pins	Input/Output
2,B	28 volts dc and common outputs: dc power supply (100 milliamperes, maximum, source) for use with interfacing to optoisolated inputs
3,C	filament go on (+/-) input: This signal is recognized only when it makes a transition from false to true and requests that the ionization gauge tube filament be energized. optional filament 1 selection and go on (See section 3.1.1.8.)
4,D	filament disable (+/-) input: When this input is true, the ionization gauge filament is switched off and is inhibited from switching on. optional filament 2 selection and go on (See section 3.1.1.8).
5,E	request rate of change (+/-) input: When this input is true, the BCD outputs listed below represent the rate of change in pressure per second of the active ionization gauge tube in either torr or pascal per second. When this input is not true, the BCD data represent pressure in either torr or pascal as selected by the rear-panel input "request pascal/$\overline{\text{torr}}$" signal.
6,F	request pascal/$\overline{\text{torr}}$ (+/-) input: When this input is true, the rear-panel BCD outputs related to the active ionization gauge tube represent pascal (or pascal per second when the "request rate of change" input is made); otherwise, the output units represent torr.

(continued)

2.2.5 (continued)

DATA CONNECTOR Pins	Input/Output	
8,J	data are increasing output: The active ionization gauge tube pressure reading is increasing.	
9,K	IG2 is on output: Ionization gauge tube 2 filament is on.	
10,L	+DP/DT is exceeded output: The pressure at the active ionization gauge tube is increasing at a rate of torr (or pascal) per second that is greater than the rate of change (increase) set point value.	
11,M	8	BCD ionization gauge exponent data output
12,N	4	
13,P	2	
14,R	1	
15,S	80	BCD ionization gauge mantissa MSD data output
16,T	40	
17,U	20	
18,V	10	
19,W	8	BCD ionization gauge mantissa LSD data output
20,X	4	
21,Y	2	
22,Z	1	

The data from the BCD outputs are related to the ionization gauge pressure readings and the status of the following inputs: request rate of change and request pascal/torr. If the filament is not on, all BCD outputs are off.

2.2.5 (continued)

Two interface methods for digital inputs and two for digital outputs appear in figure 2.4.

One interface method for the analog output appears in figure 2.5.

2.2.6 Central Processing Unit PC Board

2.2.6.1 Ionization gauge tube type jumper. The position of the jumper on CPU PC board jumper block JB3 must be adjusted for the type of ionization gauge tube used as ionization gauge tube 1. Similarly, the position of the jumper on jumper block JB4 must be adjusted for the type of tube used as ionization gauge tube 2. To check that your CPU PC board is configured for your system and to make the required adjustments, remove the bottom cover from the VersaVac gauge, and place the jumpers appropriately, as indicated in figure 2.6a. The two possible types of tube are Model 922 and Model 924.

DANGER

Because the VersaVac gauge contains high voltage, whenever you remove or attach the top or bottom cover of the unit, be sure to switch off the front-panel POWER rocker switch and unplug the input power cable.

2.2.6.2 Battery in/out jumper. In order for the VersaVac gauge to retain set-point values, the NiCd battery B1 must be charged above 2.2 volts dc, and the battery jumper on jumper block JB1 must be placed at IN, as represented in figure 2.6b.

Figure 2.4 Interface methods: Data connector digital input/output

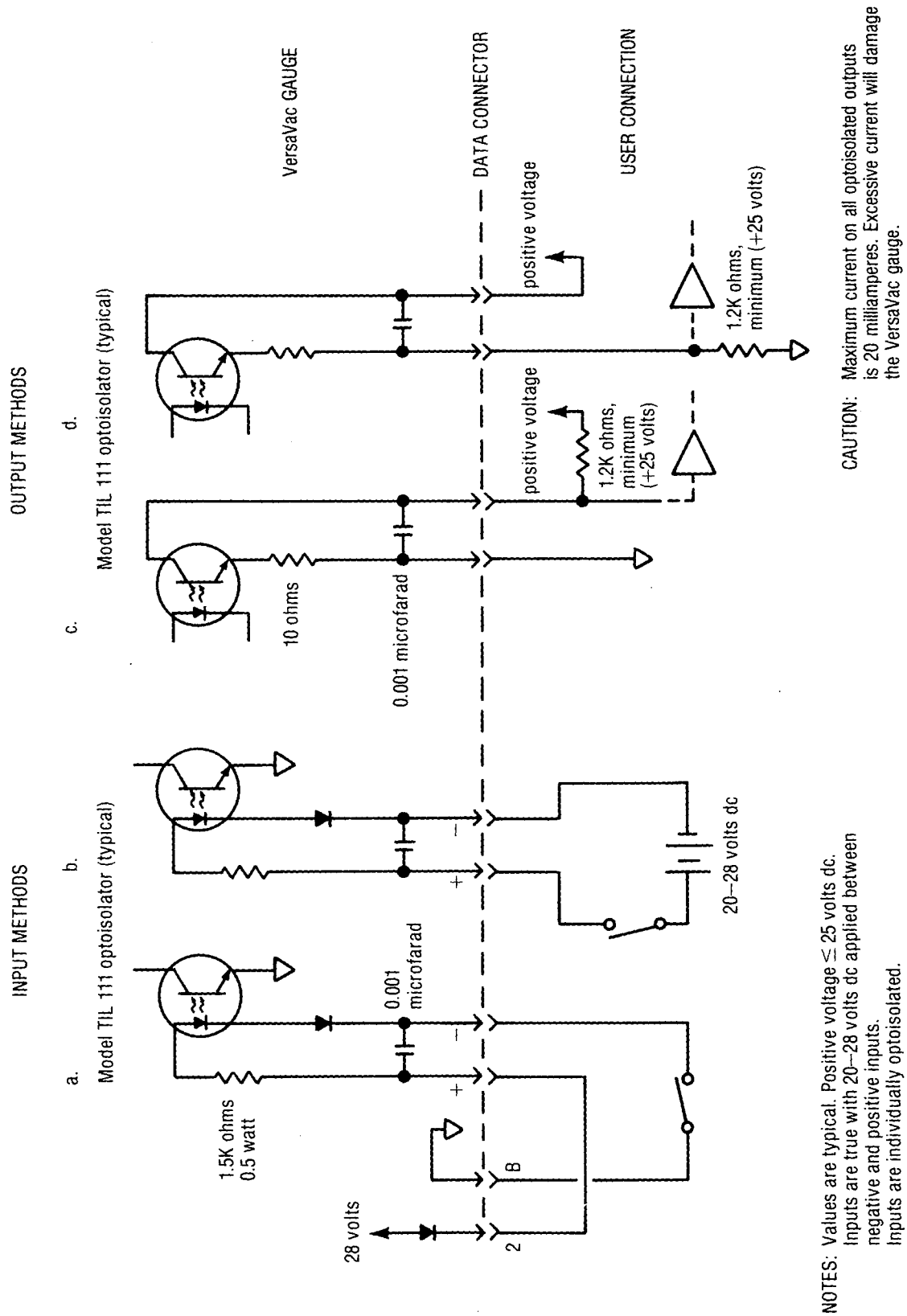

Figure 2.5 Interface method: Data connector analog output

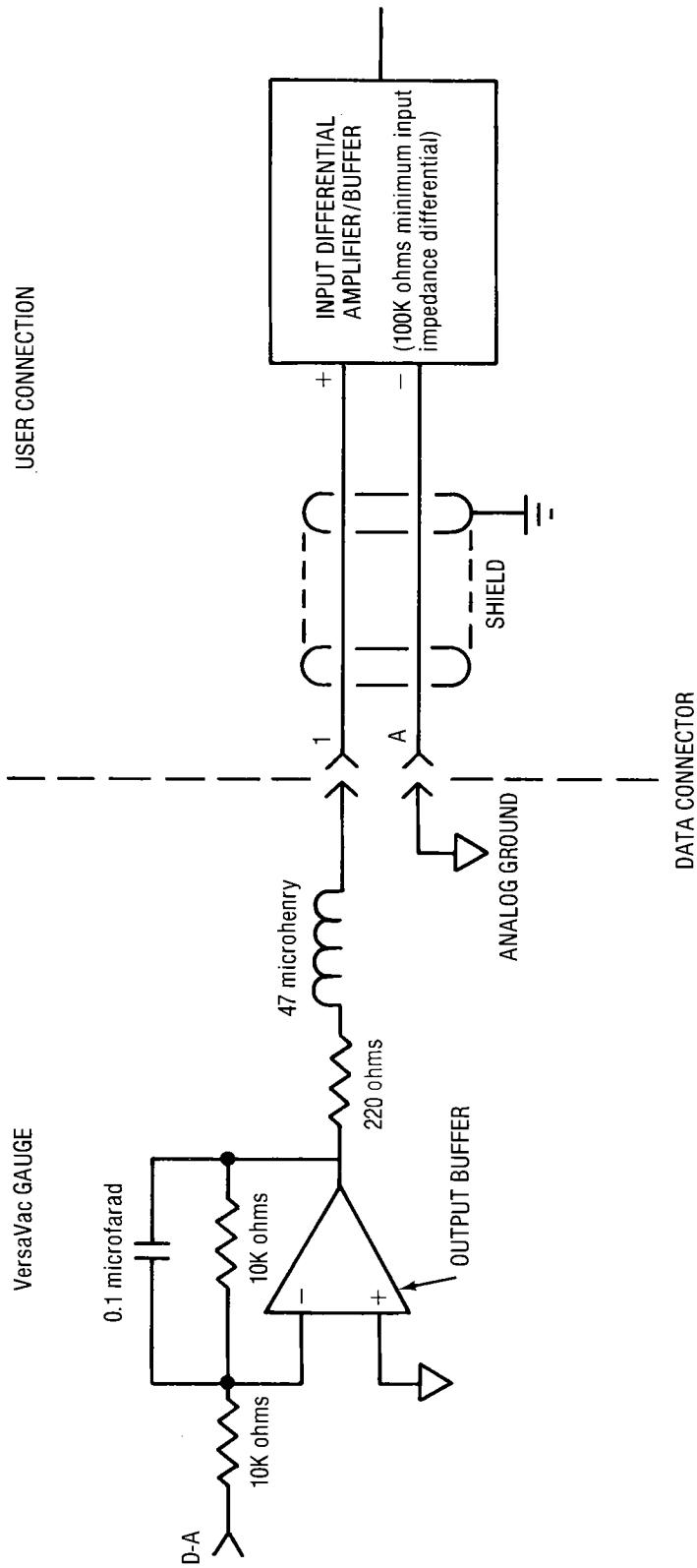

NOTE: Analog output has 220 ohms output impedance ±5%.

Figure 2.6 Central processing unit PC board adjustments

a. IG1/IG2 jumper

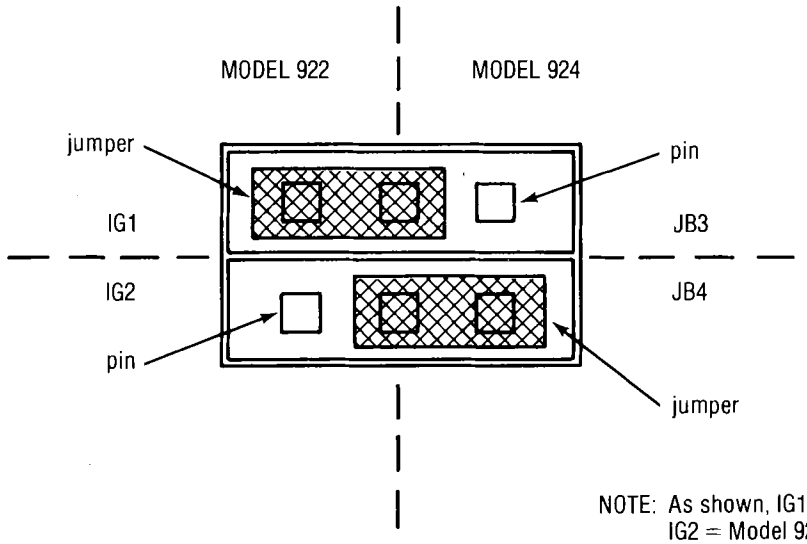

NOTE: As shown, IG1 = Model 922 and IG2 = Model 924.

b. Battery in/out jumper

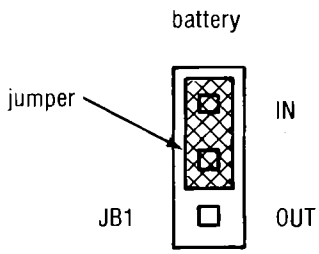

NOTE: To retain set points, put jumper at IN (as shown).

c. 50/60 hertz jumper

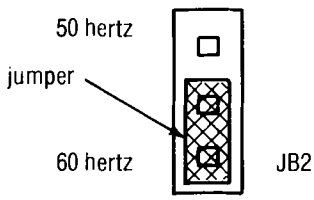

NOTE: As shown, 60 hertz is selected.

d. JB6—PASCAL/MILLIBAR display control

Factory set; do not change.

OUT = PASCAL
IN = MILLIBAR

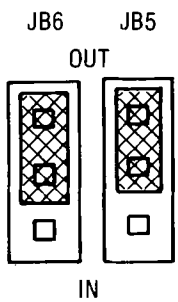

JB5—OUT = standard filament control
IN = optional filament control
(See section 3.1.1.8b.)

Ref: photograph 5

2.2.6.2 (continued)

NOTE

Under power-down conditions, the VersaVac gauge will retain for several weeks the set-point and other values listed below, if the battery is charged above 2.2 volts dc and the battery jumper is at IN.

TC1 set points 1 and 2
TC2 set points 1 and 2
*TC3 set point
*TC4 set point
*TC5 set point
IG1 set points 1 and 2
IG2 set points 1 and 2
rate of change increase set point
ionization gauge tube sensitivities (tube 1, type 922 and type 924; tube 2, type 922 and type 924)
analog voltage output mode (0-9)

CAUTION

To prevent the battery from discharging during long-term storage of the equipment (more than 4 weeks) move the battery jumper to OUT. In this situation, all set points are removed; they must be re-entered on power-up.

2.2.6.3 50/60-hertz jumper. To determine the clock period for calculations of ionization gauge rate of pressure change, set the 50/60-hertz jumper on CPU PC board jumper block JB2 in the correct position for your input power, according to figure 2.6c.

*VersaVac 5 gauge only.

SECTION 3

CONTROLS AND OPERATION

3.1 CONTROLS AND DISPLAYS

NOTE

No matter how the front-panel controls are manipulated, the VersaVac gauge cannot damage itself.

3.1.1 Front Panel (photograph 1)

3.1.1.1 POWER. The POWER rocker switches the main input power on/off.

3.1.1.2 LOCK/PROGRAM. In the LOCK mode the LOCK/PROGRAM keylock switch protects the process by locking in the set points, the ionization gauge sensitivity factor, and the analog output voltage mode.

By moving the key to PROGRAM, the operator can adjust rate-of-change (increase) and thermocouple/ionization gauge set points, alter the ionization gauge sensitivity factor, and select an analog output voltage mode, according to procedures described individually below.

3.1.1.3 Bar graphs. The 2 bar graphs, located in the upper left-hand corner, display pressure simultaneously in microns and pascal, as sensed by the thermocouple gauge tube(s).

In a VersaVac 2 gauge the upper bar graph displays the thermocouple TC1 reading, and the lower bar graph displays the thermocouple TC2 reading.

In a VersaVac 5 gauge the upper bar graph displays the thermocouple TC1 or TC3 reading, depending on the setting of the TC1/TC3 toggle switch, located to the right of the bar graph. A red LED illuminates to identify the displayed thermocouple reading. The lower bar graph displays the thermocouple

3.1.1.3 (continued)

TC2/TC4/TC5 reading (switch-selected); a red LED illuminates to identify the selection.

The bar graphs also can display the values of individual thermocouple set points. To display these values at any time in the process, the operator pushes the required SET POINTS switch, located below the bar graphs.

NOTE

Set points operate as programmed, regardless of the display selection.

3.1.1.4 SET POINTS. To display the value of a thermocouple or ionization gauge set point, the operator pushes the related SET POINTS switch. Thermocouple set point values appear on the bar graphs. Ionization gauge set point values appear in the digital display, located to the right of the bar graphs. The displayed ionization gauge set point value applies to the tube selected by the ION TUBE 1/2 switch.

Set points are displayed one at a time, while a SET POINTS switch is pushed. If more than 1 SET POINTS switch is pushed at one time, the set point displayed is the one with the highest priority according to the following list (highest priority at top).

TC1 set point 1
TC1 set point 2
TC2 set point 1
TC2 set point 2
TC3
TC4
TC5
IG set point 1
IG set point 2
rate of change (increase) set point

3.1.1.4 (continued)

NOTE

A set point (except rate of change (increase)) may be displayed at any time, but to adjust a set point the keylock switch must be at PROGRAM.

On initial power-up all thermocouple set points are at 1 micron. To adjust a thermocouple set point (in the range 1 to 1000 microns), the operator sets the LOCK/PROGRAM keylock switch at PROGRAM, pushes the corresponding SET POINTS switch and holds it, and then pushes the RAMP DOWN/UP switch until the required value is displayed.

NOTE

Ramping is slow at first but then speeds up. The operator can display single steps of a ramp by pushing the switch in and letting it out quickly.

On initial power-up all ionization gauge set points are at 1.0×10^{-7} torr/1.3×10^{-5} pascal. To change an ionization gauge set point in the range 1.0×10^{-9} torr to 9.9×10^{-2} torr (1.3×10^{-7} to 1.3×10^{0} pascal), the operator sets the keylock switch at PROGRAM. When the operator pushes either the IG SET POINTS 1/2 switch, the digital display slowly alternates between showing the mantissa and showing the exponent. When the required component (mantissa or exponent) is displayed, the operator pushes the RAMP DOWN/UP switch until the desired value shows. After the operator releases the RAMP DOWN/UP switch, the display again alternates between mantissa and exponent. To change the other component the operator repeats the above procedure.

NOTE

Set points may be displayed and changed at any time, whether or not thermocouple or ionization gauge tubes are installed and whether the ionization gauge filament is on or off, if the keylock switch is at PROGRAM.

3.1.1.4 (continued)

NOTE

The VersaVac gauge retains programmed set points as long as battery B1, located on the CPU PC board, is charged above 2.2 volts dc and the battery jumper, also located on the CPU PC board, is at IN.

3.1.1.5 ION TUBE 1/2. The operator pushes the ION TUBE 1/2 switch to select which ionization gauge tube is to be active. The indicator lamp for the selected tube illuminates. The switch is active only when the ionization gauge tube filament is off.

NOTE

When the FILAMENT LED is off, the tube selection changes each time the operator pushes the ION TUBE 1/2 switch. When the FILAMENT LED is on, you must switch off the filament before switching from 1 tube to another. (The selection is indicated by the illuminated ION TUBE 1/2 LED.)

NOTE

Ionization gauge tube selection can be made in the remote mode as described in section 3.1.1.8.

3.1.1.6 RAMP DOWN/UP. The RAMP DOWN/UP switches are active only when the keylock switch is at PROGRAM and the operator is pushing one of the SET POINTS switches. Under these conditions, the set point being accessed ramps up or down.

Trip points in the circuitry protect ionization gauge tube filaments against overpressure. For Model 922 tubes the trip point is above 9.9×10^{-2} torr (13×10^{0} pascal); for Model 924 tubes the trip point is above 9.9×10^{-4} (1.3×10^{-1} pascal).

3.1.1.7 Digital display window. The digital display window, located to the right of the bar graphs, has 7 display functions:

NOTE

Displays appear in torr/pascal, depending on the setting of the UNITS switch, as indicated by the illuminated TORR/PASCAL lamp.

a) Pressure, as read by the ionization gauge tube selected by the ION TUBE 1/2 switch when the filament is energized.

NOTE

This reading is displayed during normal operation.

b) Rate of change (in torr/pascal per second at the selected ionization gauge tube). The operator pushes the RATE OF CHANGE switch in the LOCK mode when the FILAMENT indicator is illuminated and no SET POINTS switch is pushed. The illuminated DECREASING/INCREASING lamp, located above the window, indicates the direction of pressure change.

c) Rate-of-change (increase) set point value. The operator pushes the RATE OF CHANGE switch in the PROGRAM mode when no SET POINTS switch is pushed. The mantissa and the exponent of the set point are displayed alternately.

d) Diagnostic messages. The CPU displays these messages when self-tests reveal faults. The letter E appears in the mantissa MSD segment, and other letters or numbers appear in the other segments, depending on the type of fault. (Diagnostic messages are defined in section 6.)

e) Ionization gauge tube sensitivity factor. When the operator holds in both SET POINTS IG 1 and 2 switches simultaneously, the sensitivity factor (defined in section 5) of the tube (selected by means of the ION TUBE 1/2 switch) is displayed in the mantissa window.

3.1.1.7 (continued)

NOTE

The VersaVac gauge CPU includes the sensitivity factor in the equation by which it computes ionization gauge pressures (section 5.2.1).

At initial power-up, the sensitivity factor is set at a value of 11 $torr^{-1}$ for a Model 924 tube and 10 $torr^{-1}$ for a Model 922 tube. (These are the correct values for the 2 types of tube, operating in nitrogen gas.)

The VersaVac gauge memory accommodates 4 independently programmed sensitivity factors (S), since either ionization gauge tube 1 or tube 2 can be a Model 924 or a Model 922 tube:

S1A: IG tube 1, type 924
S1B: IG tube 1, type 922
S2A: IG tube 2, type 924
S2B: IG tube 2, type 922

To adjust the sensitivity factor (in a range from 5 $torr^{-1}$ to 20 $torr^{-1}$) for the ionization gauge tube selected by the ION TUBE 1/2 switch, the operator sets the keylock switch at PROGRAM and holds both SET POINTS IG 1 and 2 switches in while pushing the RAMP DOWN/UP switch until the mantissa displays the required value.

CAUTION

The IG1/IG2 jumper, located on the CPU PC board, must be adjusted for the tube type, as described in section 6, or the readings will be in error.

f) Ionization gauge set point values. The operator holds either SET POINTS IG1/2 switch in.

3.1.1.7 (continued)

NOTE

At initial power-up all ionization gauge set points are at 1.0×10^{-7} torr (1.3×10^{-5} pascal).

g) Optional analog output voltage mode (ionization gauge recorder output). The exponent of the digital display identifies which of the 10 analog output modes (0 through 9) is selected, when the operator holds both the IG1 and the IG2 SET POINTS switches in simultaneously. At initial power-up analog voltage output mode 0 is selected. (The 10 modes are discussed in section 3.2.)

3.1.1.8 FILAMENT ON/OFF. Ionization gauge filaments can be switched on and off by means of a front panel switch or--in the remote mode--by means of signals from a rear panel connector. On the front panel, the operator pushes the FILAMENT ON/OFF to switch on/off the filament of the selected ionization gauge tube (identified by the illuminated ION TUBE lamp). If pressure is within the operating range of the selected tube, the ionization gauge filament goes on, the green FILAMENT LED illuminates, and a pressure reading appears in the digital display window.

If pressure is above the operating range of the selected tube, however, the filament and the associated LED switch off. They remain off even after pressure enters the operating range for the ionization gauge tube. The operator must use the front panel FILAMENT ON/OFF switch to switch the filament off and then to switch it on again before the filament can be reestablished.

Ionization gauge tube filaments can also be switched on and off and the tubes selected by means of inputs to the 22-pin rear panel I/O data connector. There are two methods for doing this, the choice depending on how much remote control is required.

NOTE
See figure 2.4 for system interface methods.

a) Local tube selection with remote filament on/off. Select the tube by means of the front panel FILAMENT ON/OFF switch. Apply between 20 and 28 volts dc across pins 3 and C of the rear panel I/O data connector, to produce the "filament go on" signal (drawing 0601-0253). The rising edge of the signal switches the filament on; the falling edge has no effect (figure 3.0).

To switch the filament off, apply between 20 and 28 volts dc across pins 4 and D of the rear panel I/O data connector, to produce the "filament disable" signal. The filament switches off; the front panel FILAMENT ON LED and pressure readout blank. The filament is disabled as long as the input remains high (between 20 and 28 volts dc).

b) Remote tube selection and filament on/off. On the CPU PC board install a jumper at junction box JB5 (drawing 0511-0435-0). This action transforms the rear panel "filament go on" signal into the "filament 1 go on" signal and transforms the "filament disable" signal into the "filament 2 go on" signal.

To select tube 1 and switch its filament on, apply between 20 and 28 volts dc across pins 3 and C of the rear panel I/O connector (drawing 0605-0253 and figure 2.4).

NOTE
Ionization gauge tube 1 is selected in this case even if it is not selected on the front panel.

The FILAMENT ON LED illuminates. If pressure is within the operating range of that tube, the display reads out the pressure. The filament stays on as long as the input is applied to pins 3 and C.

If pressure is too high, the filament goes off.

NOTE
If a filament switches off because pressure is too high, you must remove the input and then reapply it before the filament can be reestablished.

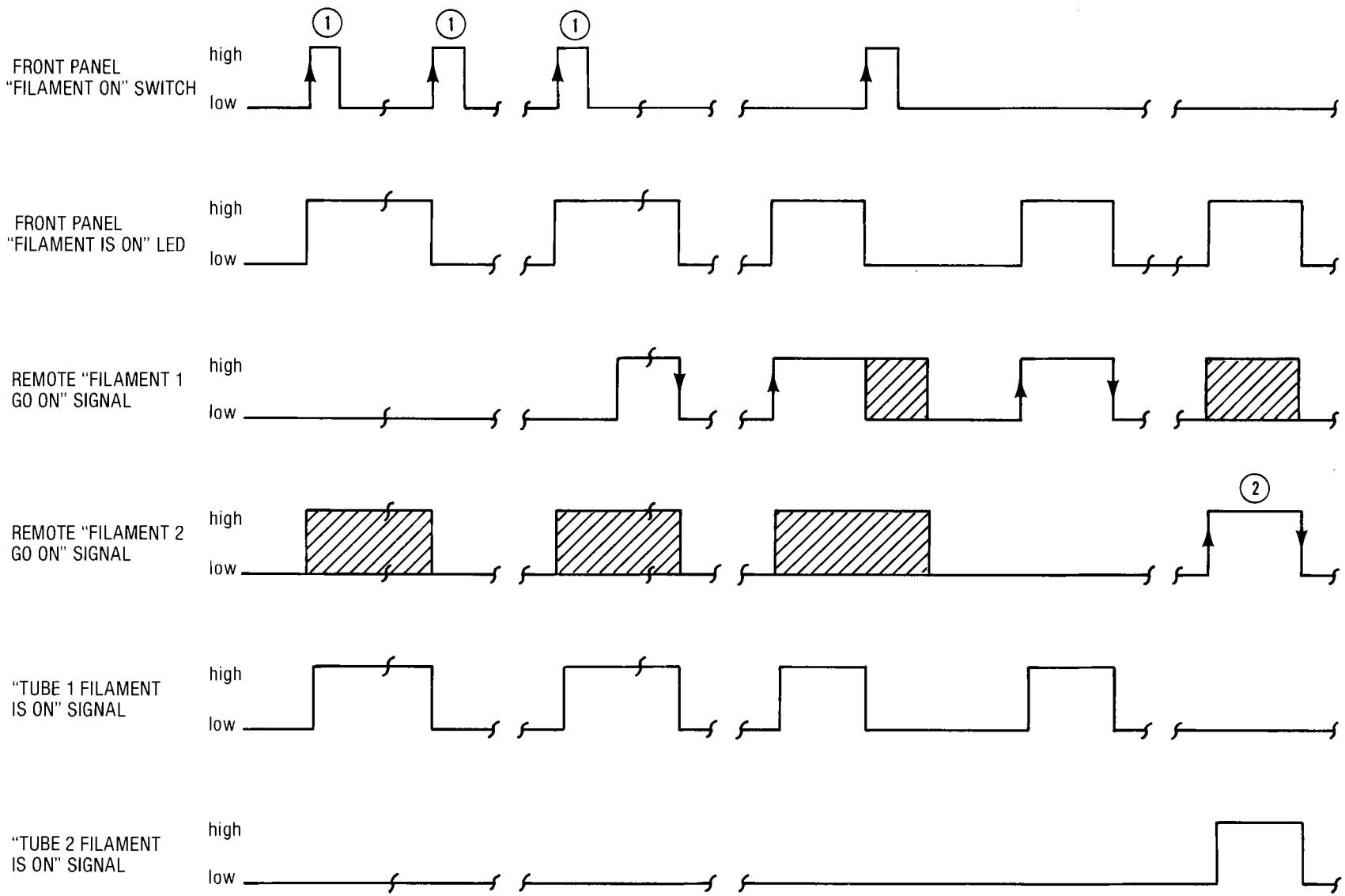

KEY: = "don't care" state. (1) = tube 1 is selected by the front panel switch. (2) = tube 2 is selected and switched on remotely; the tube stays on when the filament switches off.

High = from 20 to 28 volts dc.
Low = zero volts.

Figure 3.0 Remote selection of ionization gauge tubes

3.1.1.8 (continued)

To select tube 2 and switch its filament on, apply between 20 and 28 volts dc across pins 4 and D of the rear panel I/O connector (drawing 0605-0253 and figure 2.4).

NOTE
Ionization gauge tube 2 is selected in this case even if it is not selected on the front panel.

The FILAMENT ON LED illuminates. If pressure is within the operating range of that tube, the display reads out the pressure. The filament stays on as long as the input is applied to pins 4 and D.

If pressure is too high, the filament goes off.

NOTE
If a filament switches off because pressure is too high, you must remove the input and then reapply it before the filament can be reestablished.

3.1.1.9 UNITS TORR/PASCAL. The operator selects the pressure units that appear in the digital display by pushing the UNITS TORR/PASCAL switch. The selected unit is identified by the illuminated TORR/PASCAL LED.

NOTE
If JB6 is installed, the display will be TORR/MILLIBAR. This is an option which requires a different front panel silk screen.

3.1.1.10 DEGAS. When the ionization gauge filament is on (the FILAMENT lamp is illuminated), the operator can push the DEGAS switch to degas the ionization gauge tube. Normally, the pressure first rises somewhat and then returns slowly to the original pressure value. If the pressure rises higher than 1×10^{-3} torr (1.3×10^{-1} pascal), degas switches off and, if the ionization gauge tube is type 924, the filament goes off.

3.1.1.11 DECREASING/INCREASING. The DECREASING and INCREASING LED illuminate to indicate whether ionization gauge pressures are decreasing/increasing, respectively. These LED are active whenever the ionization gauge tube filament is active.

3.1.1.12 RATE OF CHANGE. When the keylock switch is at LOCK (the LOCK mode) and the FILAMENT LED illuminated (indicates the active ionization gauge tube filament is on), the operator can push the RATE OF CHANGE switch to display the rate of pressure change sensed by the active ionization gauge tube (torr/pascal per sec). The back-lighted RATE OF CHANGE switch illuminates. If the operator pushes the RATE OF CHANGE switch a second time, the digital display returns to showing the ionization gauge tube pressure reading, and the back-lighted RATE OF CHANGE switch extinguishes.

The rate of change reading has a 1-second time base. To arrive at the rate of change, the ionization gauge pressure is read 10 times per second, the 10 sample readings are averaged, and the previous average is subtracted from the new average. The result is displayed.

If ionization gauge pressure rises above the rate-of-change (increase) set point during normal operation, the RATE OF CHANGE switch flashes to alert the operator (a DATA CONNECTOR output is available to signal the rate of change (increase) set point status).

When the keylock switch is at PROGRAM, the operator can use the RATE OF CHANGE switch to display or adjust the rate-of-change (increase) set point in the range 1.0×10^{-9} torr per sec to 9.9×10^{-2} torr per sec (1.3×10^{-7} pascal per sec to 13×10^{0} pascal per sec). Pushing the RATE OF CHANGE switch in the PROGRAM mode causes the rate-of-change (increase) set point to show on the digital display (alternating mantissa and exponent). The operator adjusts the set point by pushing the RAMP UP/DOWN switch, for the mantissa and for the exponent individually. On initial power-up this value is programmed at 1.0×10^{-7} torr per second.

3.1.1.12 (continued)

NOTE

Battery B1, located on the CPU PC board, retains the most recently programmed set point on power-up.

3.1.2 Rear Panel (photograph 2)

3.1.2.1 Power input. At left on the rear panel is the main input power (100/120/220/240 volts ac, 50/60 hertz). Immediately to the right of the input connector is the main power fuse holder and main voltage changeover PC board. Both the PC board and the fuse must be adapted to the input power.

NOTE

The VersaVac gauge is preset at the factory for 120 volts input power.

The procedure for adapting the main voltage changeover PC board is indicated in figure 2.1. Fuse ratings: 100/120 volts input power, 3 amperes; 220/240 volts input power, 1.5 amperes.

3.1.2.2 Ionization gauge tube sockets. The keyways in the octal sockets for ionization gauge tubes 1 and 2 protect the cables from being connected incorrectly. The socket for tube 1 is above the socket for tube 2.

3.1.2.3 Collector BNC connector for ionization gauge tubes 1 and 2. The connector for tube 1 is above the connector for tube 2.

3.1.2.4 Thermocouple gauge tube sockets. Each thermocouple gauge tube requires a 5-point amphenol connector with locking tabs, which plugs into the related rear-panel socket.

3.1.2.5 SET POINT CONNECTOR. The 22-pin SET POINT CONNECTOR transmits interface signals as indicated in drawing 605-0243 (drawing 511-0243, if the optional solid-state relay board for 240-volt ac interface is installed; see section 2 for installation).

3.1.2.6 DATA CONNECTOR. The 22-pin DATA CONNECTOR transmits digital input/output and analog output signals as indicated in drawing 605-0253, in figure 2.4, and in figure 2.5.

3.2 ANALOG OUTPUT VOLTAGE MODES

3.2.1 Description

Ten optional analog output voltage modes (mode 0 through mode 9) are available from the VersaVac gauge rear-panel DATA CONNECTOR analog output (pins 1 and A).

Mode 0 can be used for data-logging through 6 decades of ionization gauge pressure, using the single analog output.

The output voltage in mode 1 corresponds exactly to the mantissa (in torr) in any of 7 ionization gauge pressure decades. Thus, mode 1 offers the greatest accuracy through the full range of ionization gauge pressure readings. In data-logging applications, this mode is used with BCD output for decoding.

Modes 2 through 9 provide 0 to 9.9 volts dc output for the related individual pressure decades in torr (the mode numbers identify the pressure decades they apply to; mode 2, for example, identifies the decade 10^{-2}). Modes 2 through 9 are convenient for automatic pressure control applications and for data-logging in specific pressure decades.

3.2.2 Changing the Mode

At initial power-up, the controller selects mode 0. For special applications, however, the user can program another analog output voltage mode by the following procedure.

3.2.2.1 Turn the keylock switch to PROGRAM.

3.2.2.2 Push the two IG SET POINTS 1 and 2 switches simultaneously. The exponent of the digital display identifies the selected mode.

3.2.2.3 To change mode, hold both IG SET POINTS 1 and 2 switches in, and, when the exponent is displayed, push the RAMP DOWN/UP switch until the desired mode number appears.

NOTE

The VersaVac gauge memory retains the selected analog output voltage mode and the set point values several weeks after power-down, if the battery on the CPU PC board is charged above 2.2 volts dc and the battery jumper is at IN.

3.2.3 Individual Modes

3.2.3.1 Mode 0. Using the single analog output pins 1 and A on the DATA CONNECTOR, the operator can data-log over the range of up to 6 decades of ionization gauge pressure (figures 3.1 and 3.2). Each decade has approximately 25 voltage levels (steps); each step is a change of one least-significant bit (LSB) out of 8 bits, on the digital input of the D-A (digital to analog) converter (port 8). At pressures less than 1×10^{-8} torr (1.3×10^{-6} pascal), the output voltage is 0. At pressures greater than 9.9×10^{-2} torr, or 13×10^{0} pascal (or if the filament is off) the output voltage is 9.96 (figure 3.2).

Figure 3.1 Typical analog output for data logging (mode 0)

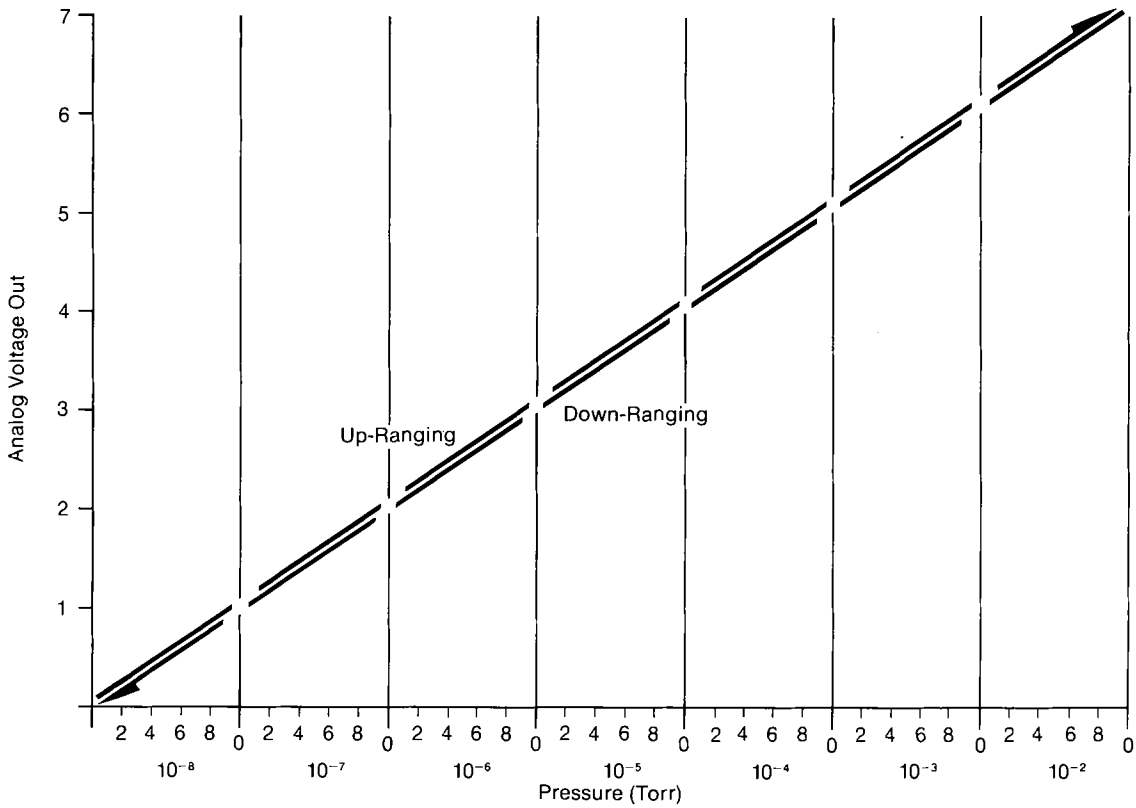

Figure 3.2 Analog voltage output mode 0

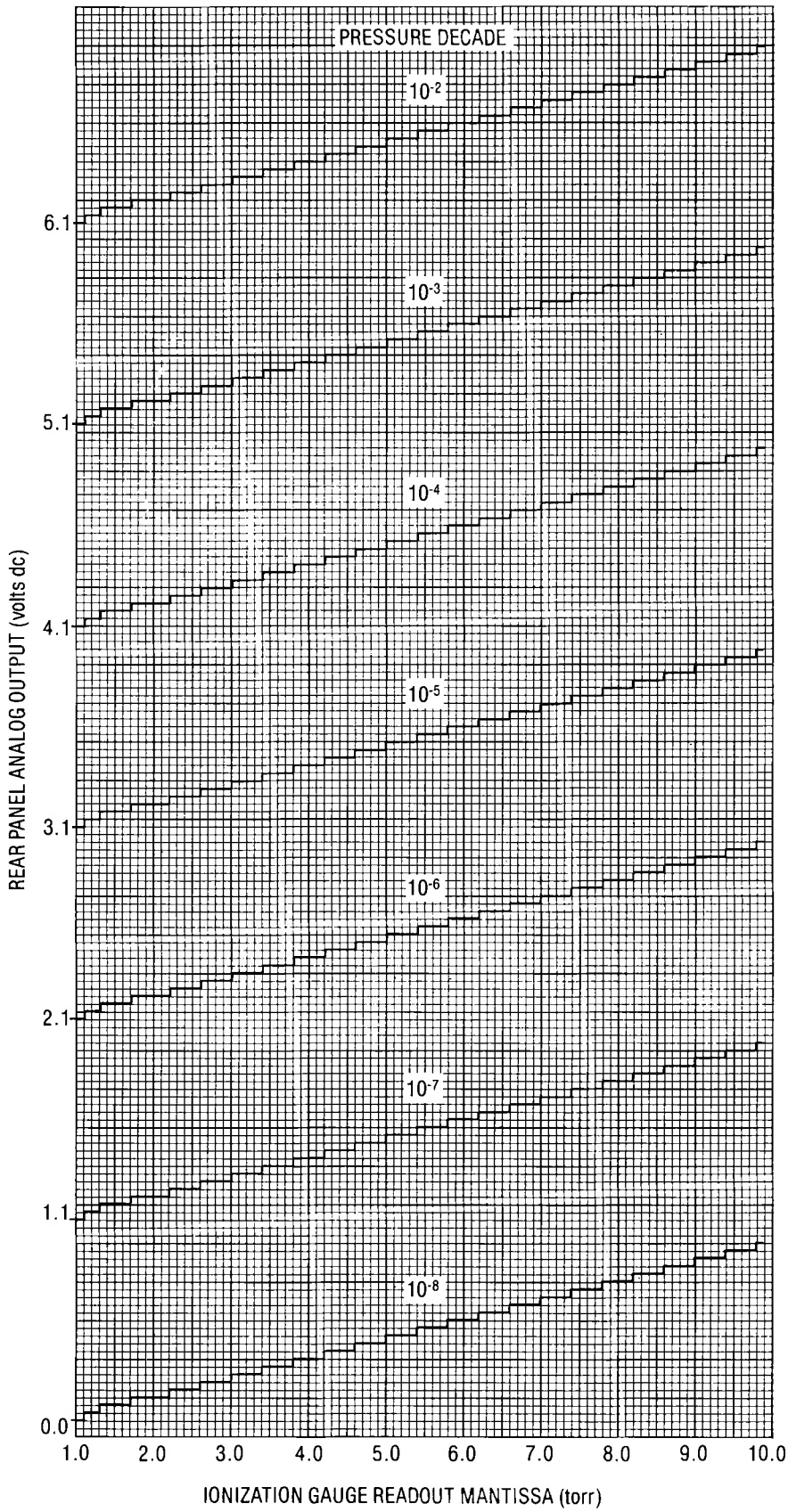

3.2.3.1 (continued)

NOTE

The graphed voltages are nominal. Because reference voltage (V_{ref}) can vary from 9.95 to 10.05 volts and because of other circuit tolerances, the actual measured voltage is ±1%, ±40 millivolts.

3.2.3.2 Mode 1. The analog output can be used to monitor the ionization gauge mantissa directly in torr, using mode 1. The output signal ranges from 1.0 volt to 9.9 volts, corresponding to an ionization gauge mantissa of 1.0 to 9.9 torr. This is true in any monitored pressure decade (any displayed exponent). If the filament is not on, the output voltage is 9.96 volts (figure 3.3).

NOTE

To obtain the exponent through rear-panel interface, monitor the BCD outputs for the exponent (in torr).

Mode 1 offers the highest accuracy of the available modes in the full pressure range. This output is valid for the Model 922 tube in 8 pressure decades and for the Model 924 tube in 6 pressure decades. Each decade includes approximately 90 voltage levels (steps).

NOTE

Voltages graphed in figure 3.3 are nominal. Actual variation can be ±1%, ± 40 millivolts.

3.2.3.3 Mode 2 through mode 9. Mode 2 through mode 9 (figure 3.4a-h) are similar to mode 1 in that the analog output varies from 1.0 volt to 9.9 volts, corresponding to the ionization gauge mantissa (in torr). They differ, however, in that

3.2.3.3 (continued)

the linear analog output in each of these modes only occurs in one pressure decade. (The mode number identifies the valid exponent in torr at which linear output occurs.) At pressures above the valid decade the output voltage is 9.96 volts. At pressures below the valid range, the output is 0.0 volts.

NOTE

The output voltage is 9.96 also when the ionization gauge tube filament is off.

Modes 2 through 9 are suited to automatic pressure control applications and to data-logging in specific pressure decades.

NOTE

Voltages graphed in figure 3.4 are nominal. Actual variation can be ±1%, ±40 millivolts.

Figure 3.3 Analog voltage output mode 1

a. Full range

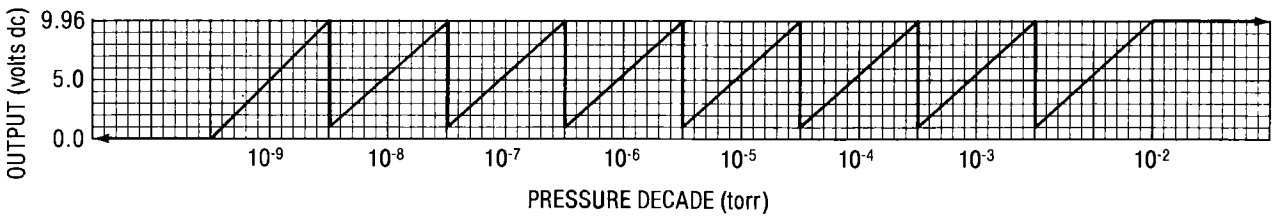

b. Individual decade

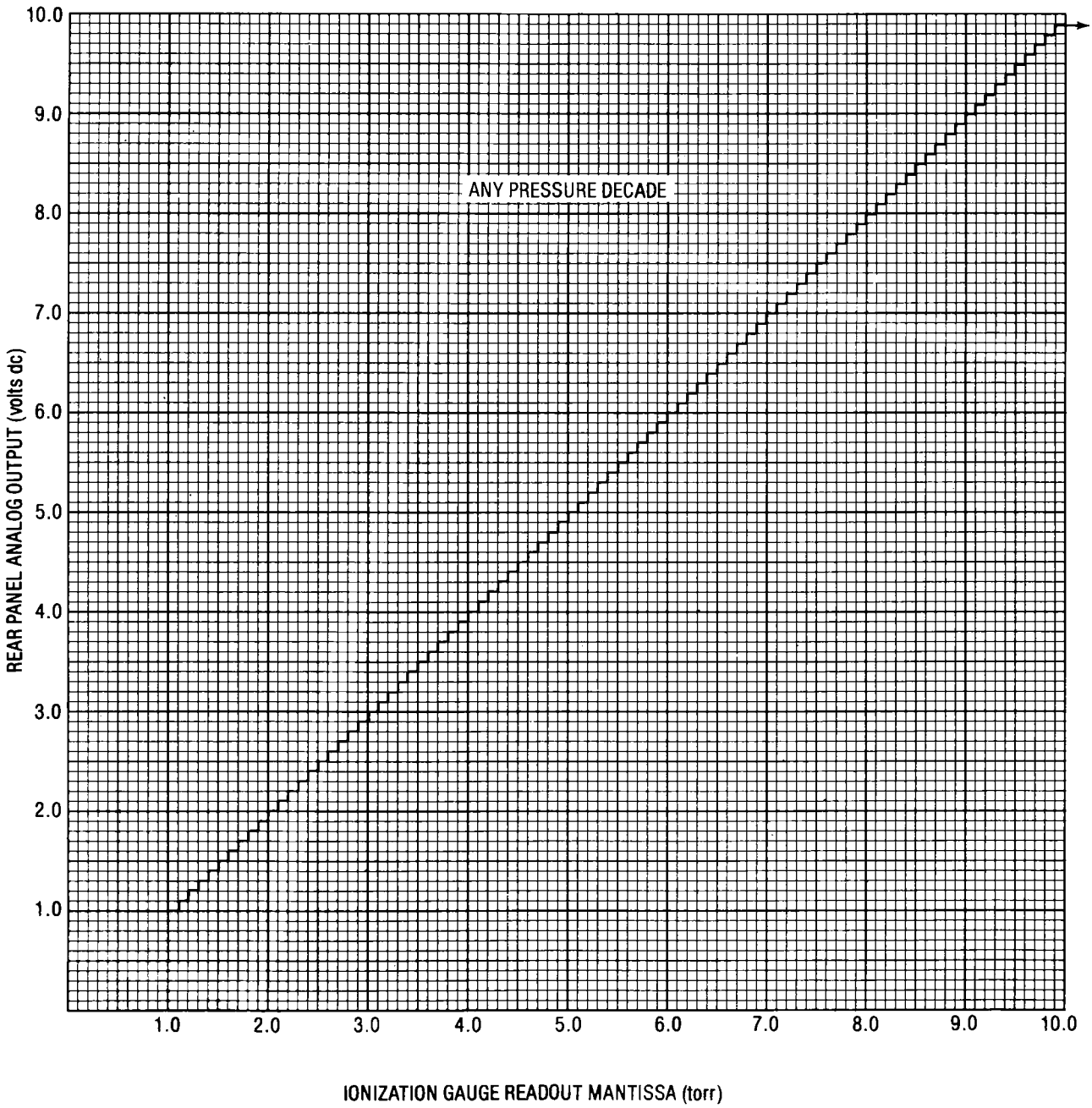

Figure 3.4 **Analog voltage output modes 2 through 9**

a. Mode 2

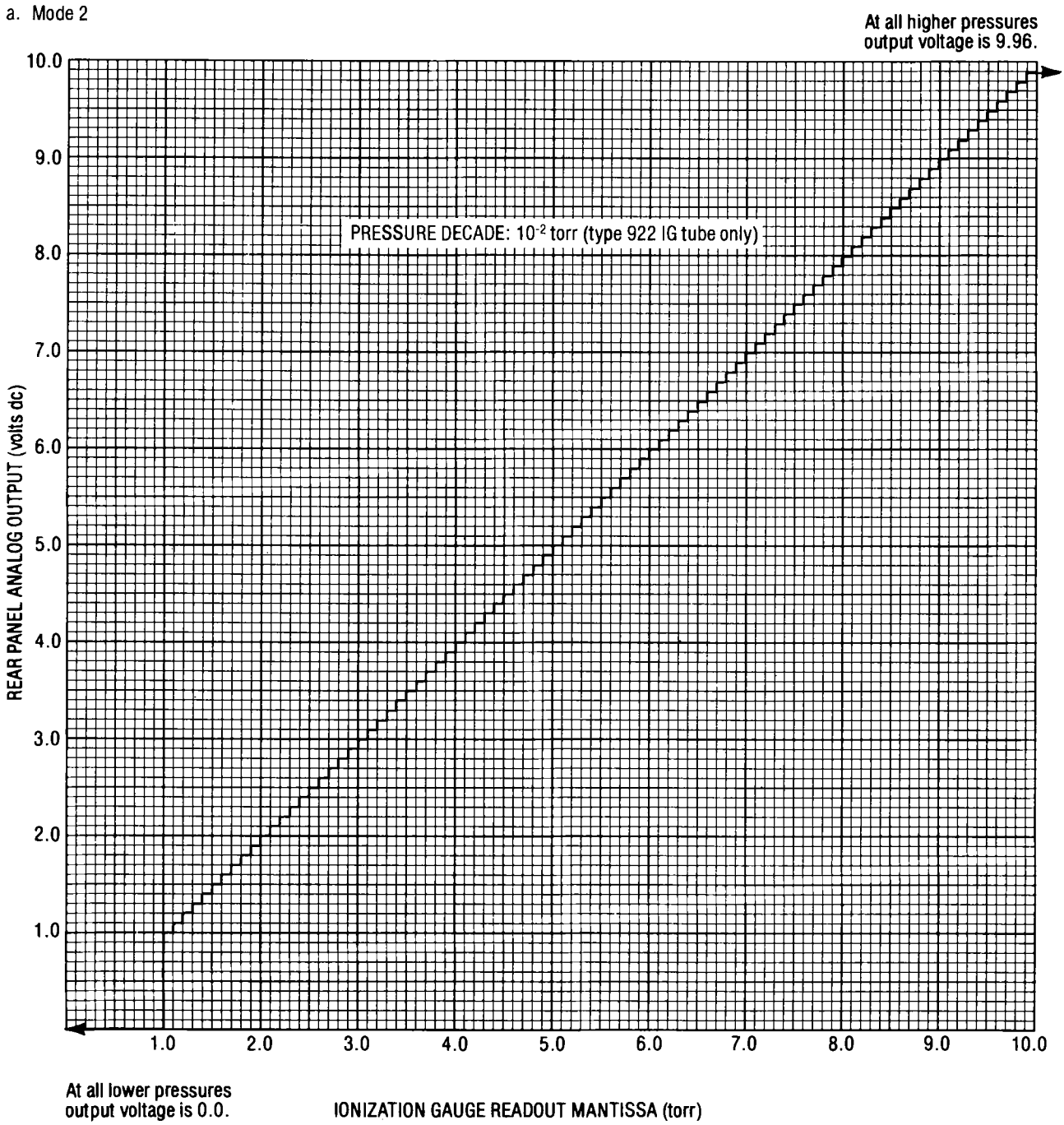

Figure 3.4 **Analog voltage output modes 2 through 9 (continued)**

b. Mode 3

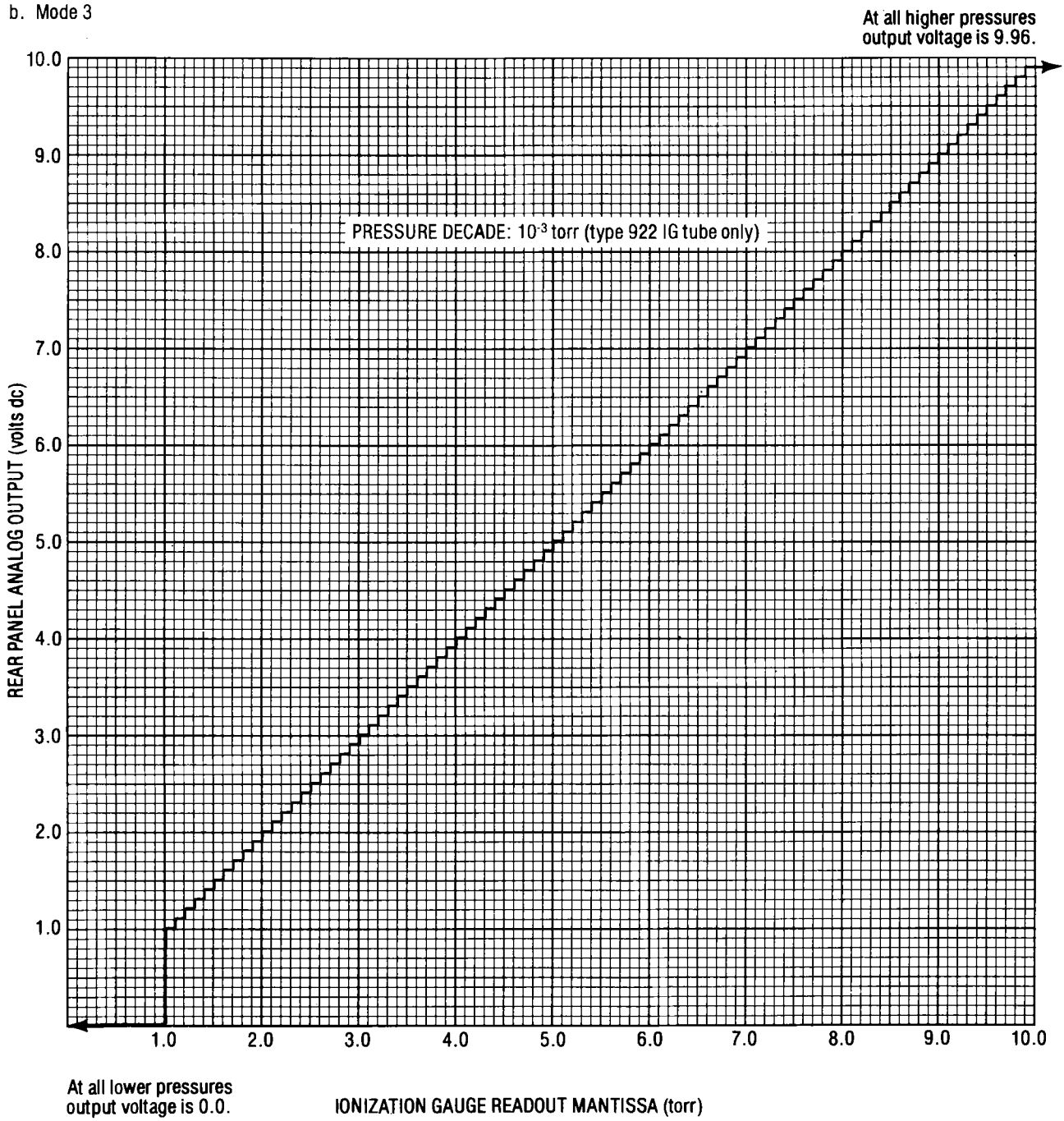

Figure 3.4 **Analog voltage output modes 2 through 9 (continued)**

c. Mode 4

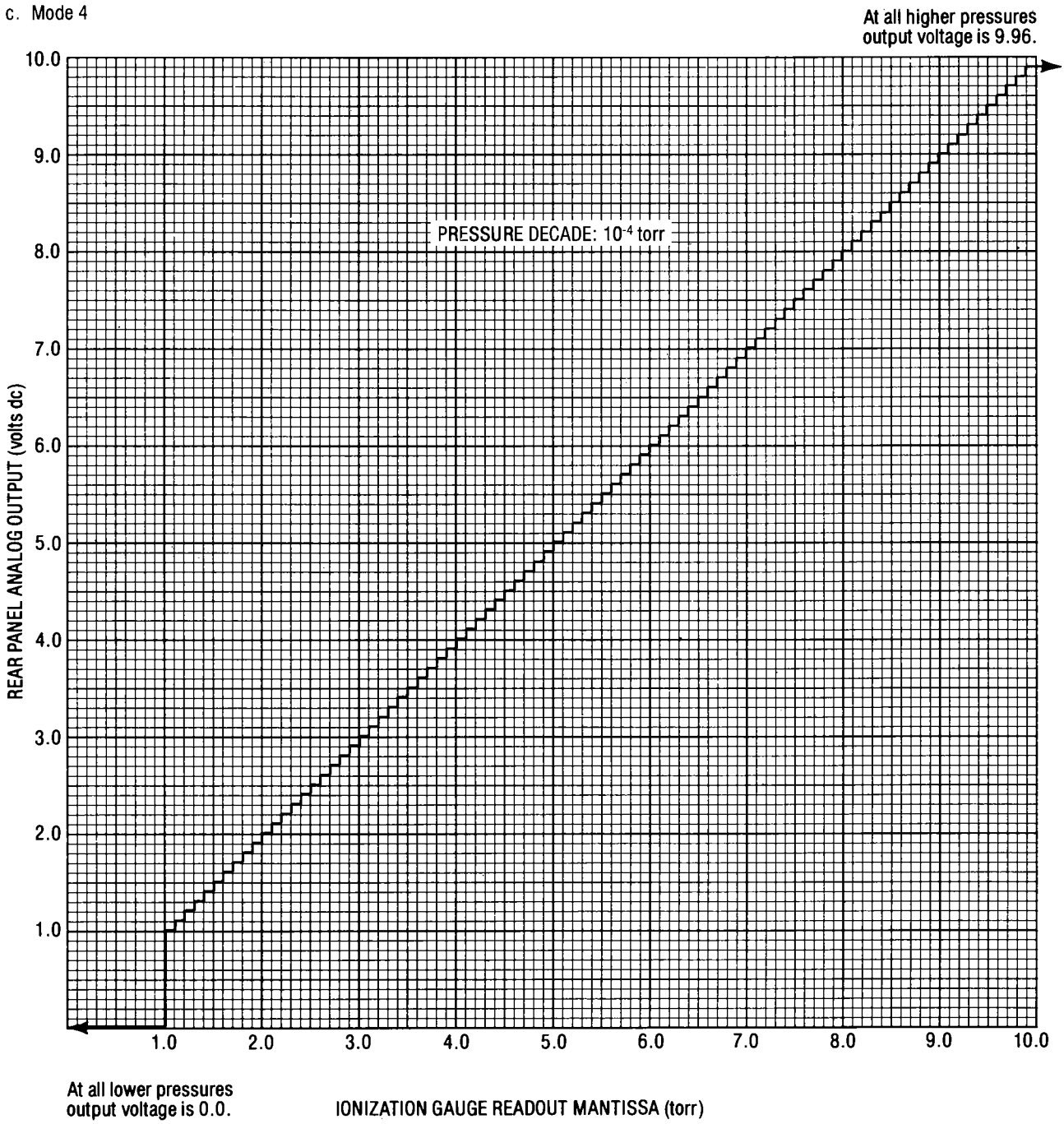

Figure 3.4 **Analog voltage output modes 2 through 9 (continued)**

d. Mode 5

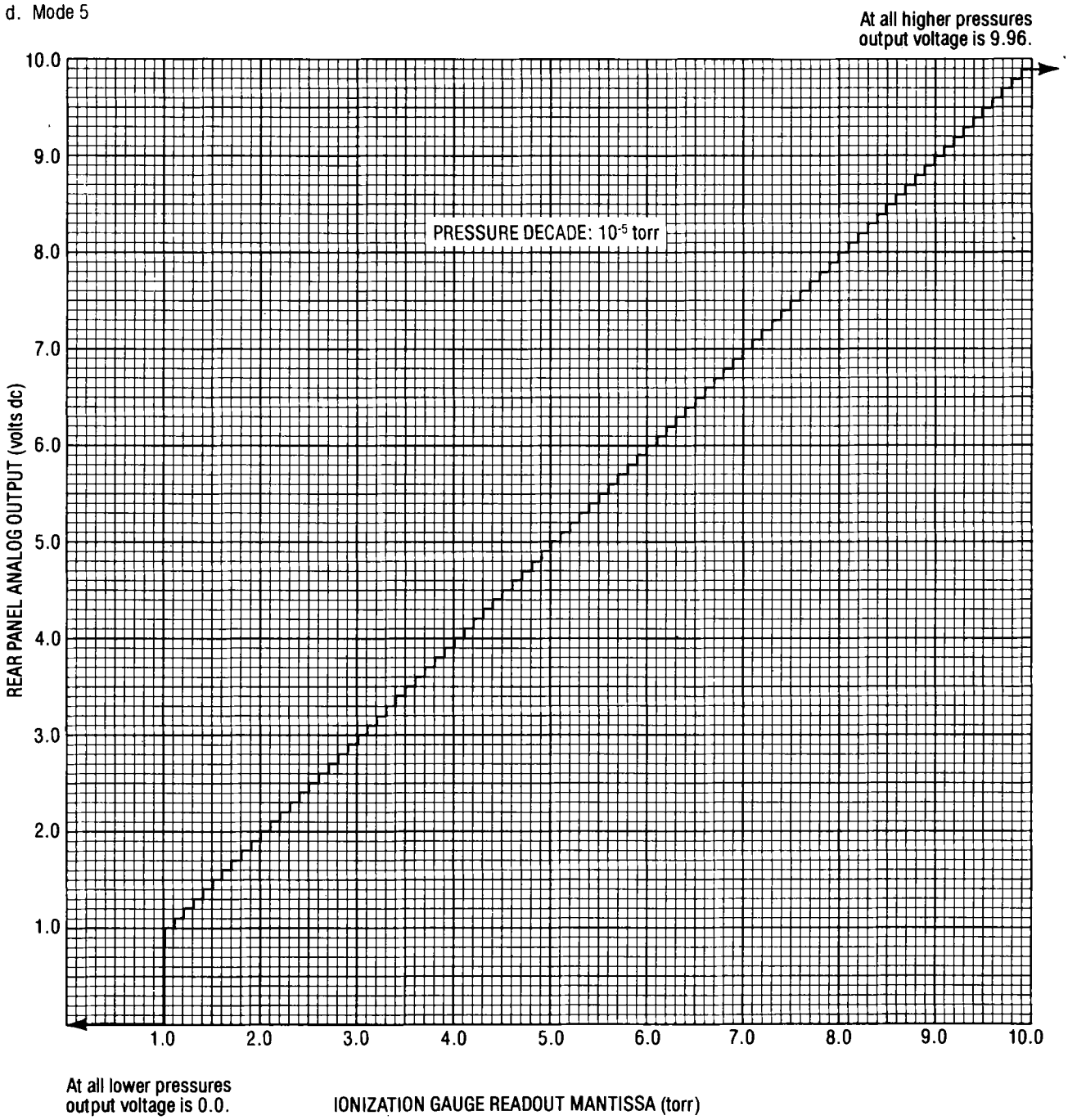

Figure 3.4 **Analog voltage output modes 2 through 9 (continued)**

e. Mode 6

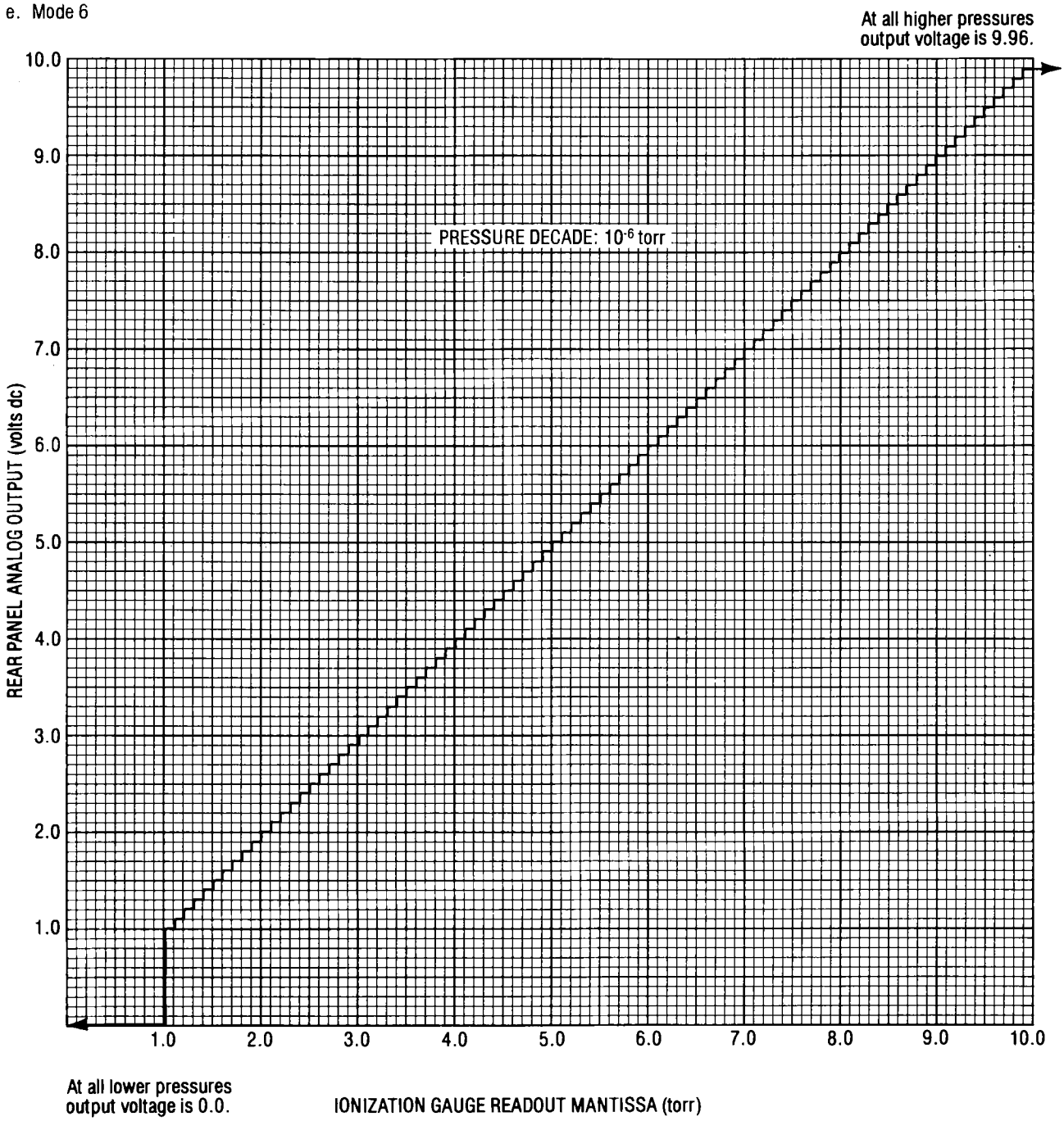

Figure 3.4 **Analog voltage output modes 2 through 9 (continued)**

f. Mode 7

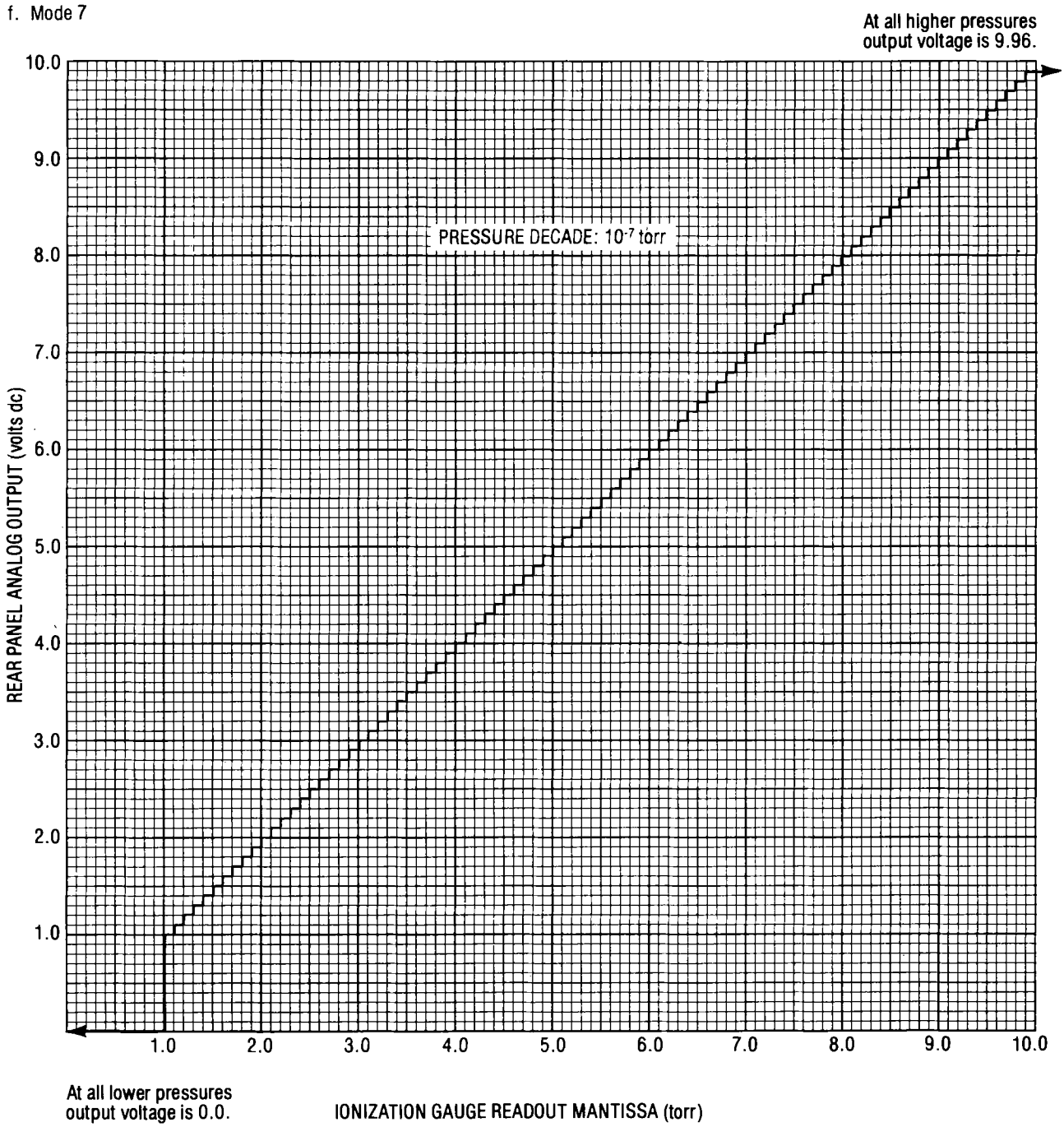

Figure 3.4 **Analog voltage output modes 2 through 9 (continued)**

g. Mode 8

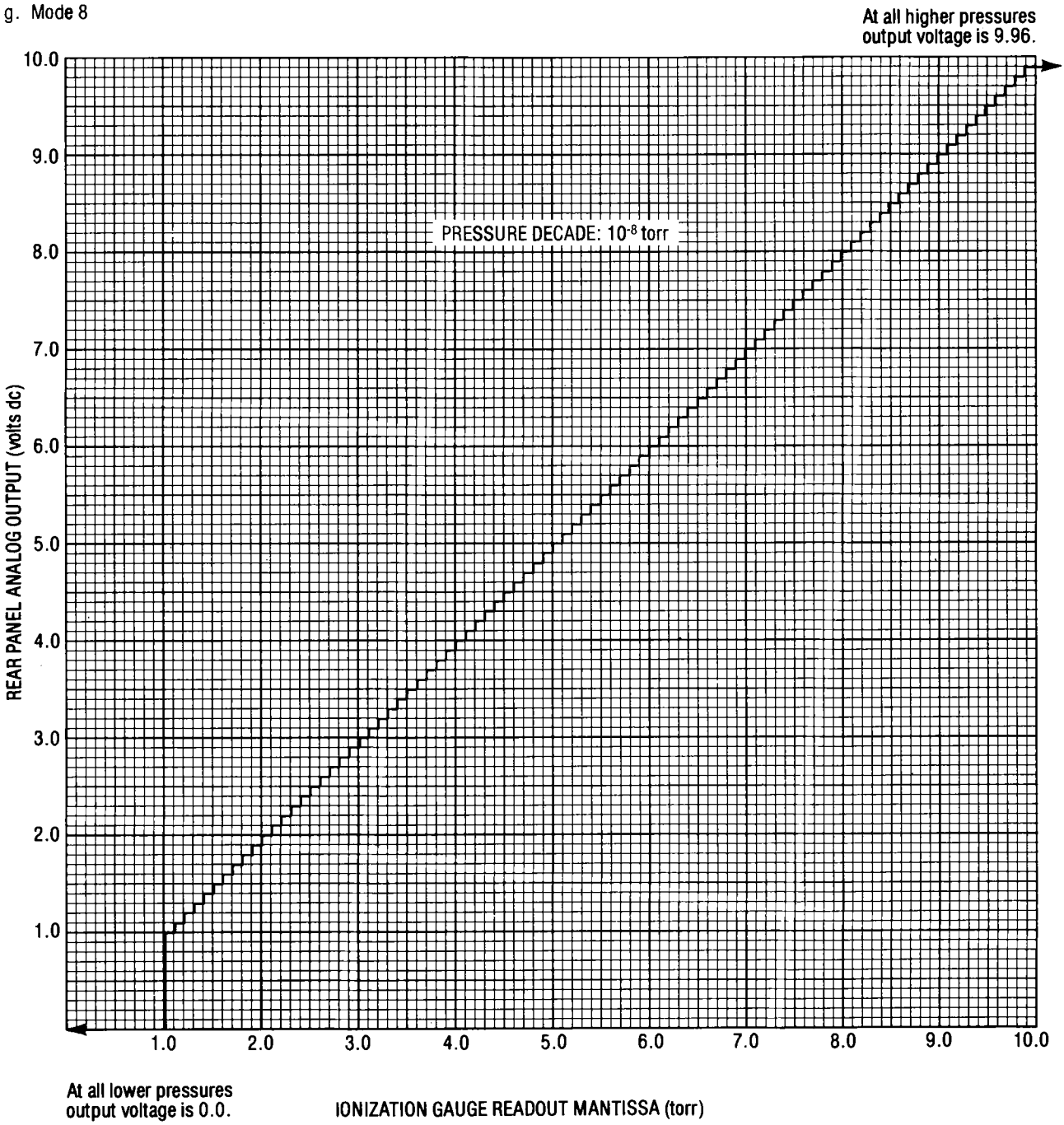

Figure 3.4 **Analog voltage output modes 2 through 9 (continued)**

h. Mode 9

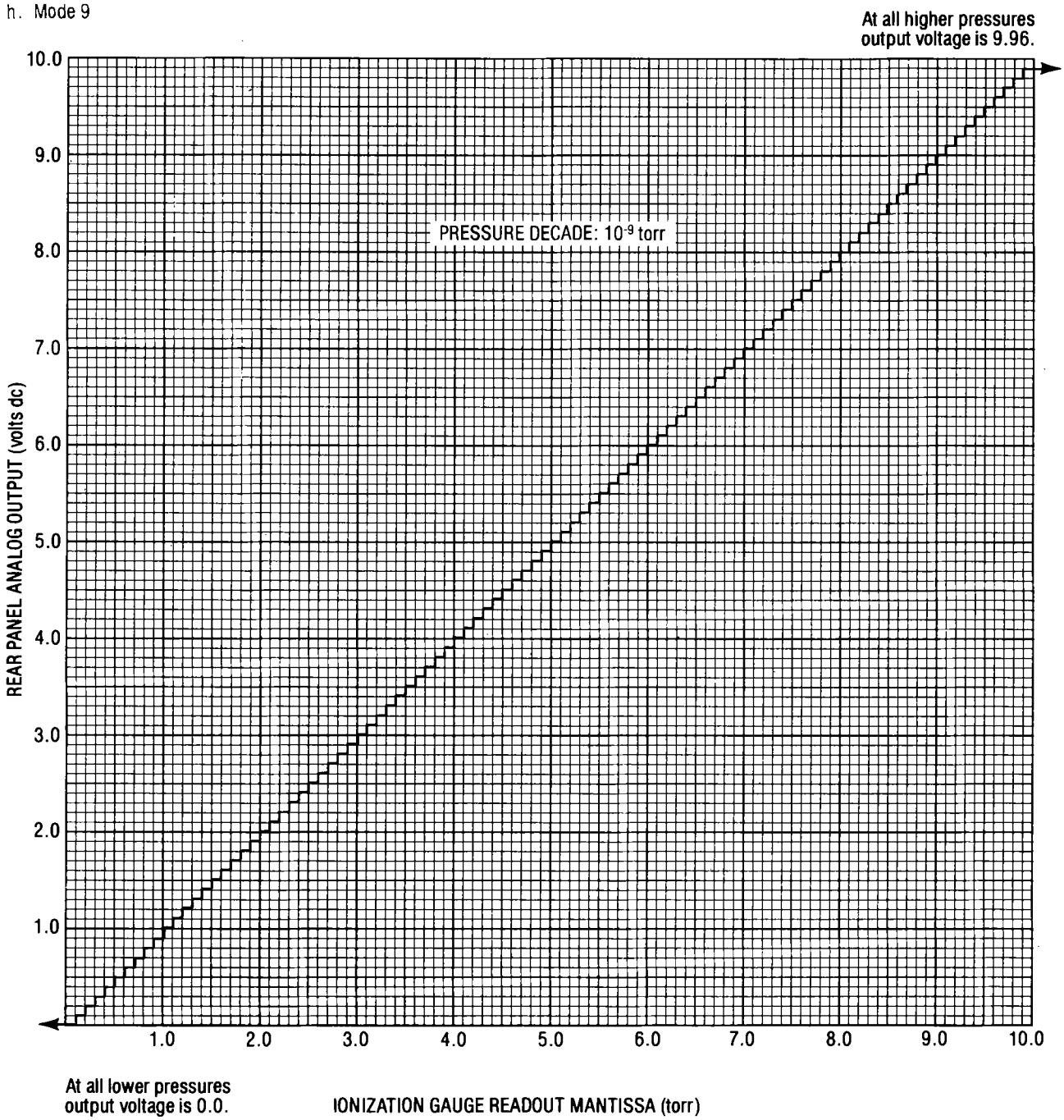

SECTION 4

CIRCUIT THEORY

4.1 INTRODUCTION

Block diagrams in figure 4.1 represent the functioning of the VersaVac gauge circuitry. Figure 4.2 indicates where the individual functions are performed in the circuitry.

CAUTION

Printed circuit board schematics that appear in figure 4.2 identify circuit functions only. For detail refer to drawing 511-0174 in section 7.

4.2 FIGURE 4.1: CONTENTS

Page 1: Block diagram index

Page 2: Block diagram index (continued)

Page 3: Input power distribution

Page 4: Power supply PC board

Page 5: Power supply PC board

Page 6: Ionization gauge tube filament regulator

Page 7: Electrometer

Page 8: Thermocouple gauge tube circuits

Page 9: Central processing unit PC board

Page 10: Front panel input ports

Page 11: Central processing unit PC board data acquisition

Page 12: Input port 4

Page 13: Front panel output ports

Page 14: Central processing unit output ports

Page 15: Bar graph display

Page 16: Central processing unit PC board analog voltage output

Page 17: Central processing unit PC board optoisolator outputs, ports 9 and 10

Page 18: Relay output

4.3 FIGURE 4.1: COMMENTARY

4.3.1 Pages 1 and 2: Index

This index of tie points and printed circuit (PC) boards facilitates reference among the pages of

4.3.1 (continued)

figure 4.1 (the tie points, which appear as circled numbers, apply only to this figure) and between the figure 4.1 block diagrams and the PC board schematics that appear in figure 4.2.

4.3.2 Page 3: Input Power Distribution

The user determines the input power voltage (100/120/220/240 volts ac; 50/60 hertz).

NOTE

See figure 2.5 for CPU PC board 50/60 hertz jumper placement.

The fuse must correspond to the line voltage, as follows:

100/120 volts ac: 3 amperes 3AG 250 volts ac;
220/240 volts ac: 1.5 amperes 3AG 250 volts ac.

The front-panel POWER rocker switch connects/disconnects all power to the VersaVac gauge power transformer.

The input RFI filter helps prevent RF (radio frequency) power line noise from affecting operation of the VersaVac gauge. The power transformer provides 6 isolated windings:

a) 180 volts ac, 50 milliamperes
b) 20 volts ac, 1 ampere
c) 20 volts ac, 1 ampere
d) 10 volts ac, 5 amperes
e) 10 volts ac, 2.5 amperes
f) 7.5 volts ac, 8 amperes

4.3.3 Page 4: Power Supply PC Board

The 180 volts ac, 50 milliamperes winding of the power transformer is rectified and filtered to provide 250 volts dc, unregulated power. The front-panel bar graphs (gas-discharge displays) use the 250 volts dc power. The 250 volts dc also go to the 180 volts dc

4.3.3 (continued)

power supply. This voltage, produced only when the filament is on, provides power to the grid element of the active ionization gauge tube. Current-limiting, at 25 milliamperes, protects against shorts. The grid voltage monitor consists of a voltage divider and a comparator, which sense short circuits in the ionization gauge tube and hookup. The "grid voltage OK" signal is sent to the CPU for fault detection.

The 20 volts ac, 1 ampere, winding on the power transformer (tie point 17) is rectified and filtered to provide a 28 volts dc power supply, which powers the relays on the relay PC board. The 28 volts dc signal also powers the regulated 15 volts dc power supply. The 15 volts dc powers the analog circuits of the VersaVac gauge, as well as supplying power for the 10.0 volts dc reference voltage (V_{ref}).

The second 20 volts ac, 1 ampere, winding on the power transformer (tie point 18) is rectified and filtered to produce -28 volts dc. This voltage powers the regulated -15 volts dc power supply. The -15 volts dc powers the analog circuits of the VersaVac gauge.

4.3.4 <u>Page 5: Power Supply PC Board</u>

The power transformer provides a 10 volts ac, 2.5 amperes winding (tie point 20), which is rectified and filtered to produce a 14 volts dc power supply. The 14 volts dc powers the 5 volts dc regulated power supply. The 5 volts dc power supply, a switching-regulator type, runs at 20 kilohertz. It is current-limited at approximately 2 amperes dc. The reference voltage (10.0 volts dc) provides ±1% tolerance for the 5.0 volts dc output. The 5 volts dc powers the CPU and the logic circuitry as well as the front-panel LED displays and indicators.

The 7.5 volts ac, 8 amperes, winding on the power transformer is used in degassing, to heat up the grid fixture of the ionization gauge tube. The rise in grid structure temperature is produced by I^2R resistance heating (approximately 50 watts).

4.3.4 (continued)

The "degas on" switch block sends the 7.5 volts ac to the ionization gauge tube switch block (not the front-panel switch), which applies the degas power to ionization gauge tube 1 or 2 when the tube is active.

The 10 volts ac, 5 amperes, winding on the power transformer powers the ionization gauge tube filament. The filament exciter circuit receives a pulse-width-modulated signal, which is synchronized to the line frequency. This phase fires a Triac to achieve a variable ac power source for filament control. The ionization gauge tube switch block selects whether the tube 1 or tube 2 filament is energized. The filament operates at approximately 30 volts dc above ground because of the 30-volts dc bias (zener diode).

The 180 volts dc grid power is applied to the ionization gauge tube switch block so that only the active tube receives it. The CPU controls the degas switch and the ionization gauge tube switch.

4.3.5 Page 6: Ionization Gauge Tube Filament Regulator

The power transformer applies 40 volts ac to the zero-crossing detector, which provides a 1-shot output every time the input line voltage goes through 0 volts. The output period is 8.33 milliseconds at 60 hertz and 10.0 milliseconds at 50 hertz. This signal goes to the CPU board and also resets the linear ramp generator. The ramp generator has a time constant of 0.022 seconds. After being reset to zero volts, the ramp generator provides a positive output voltage ramp that changes in a linear relationship with time until it is again reset and the cycle continues. The result is a sawtooth waveform synchronized to the line, having a period of 8.33 milliseconds at 60 hertz or 10.0 milliseconds at 50 hertz.

The pulse-width modulator is a comparator with hysteresis. It compares the error-signal voltage from the ionization gauge tube filament regulator (and error amplifier) to the sawtooth waveform. The output of the pulse-width modulator is a square wave with a duty cycle proportional to the error signal.

4.3.5 (continued)

The output of the pulse-width modulator drives the Triac in the filament exciter through the optoisolated driver. The optoisolated Triac driver allows the pulse-width-modulated error signal to power the filament exciter at a "filament on" command from the CPU. If the "filament on" command (tie point 31) is not present, the filament exciter remains off.

As mentioned, the filament is biased 30 volts above ground. Electron current flowing from ground to filament equals the ionization gauge emission current. This ground-to-filament current is sensed by the voltage drop across resistor R37. A drop of 1.0 volt dc is equivalent to 2 milliamperes emission current. This signal goes to the programmable-gain amplifier and to the filament regulator.

The programmable-gain amplifier can be programmed for 4 possible gains: 1/10/100/1000 volts per volt. The gain is set by the CPU, as it reads the values of emission current through the data-acquisition system (figure 4.1, page 11). For offset adjustment, see section 7. The amplified emission current signal is applied to a low-pass filter, a second-order filter having a cutoff frequency of 16 hertz. The filter removes the second harmonic of line frequency component from the emission current. The filtered signal goes to the analog multiplexer on the CPU board (data-acquisition).

The emission current sense signal is applied to the filament regulator, as is the ion current signal from the electrometer. The filament regulates either emission current or positive ion current. At low pressures (for example, 10^{-6} torr/10^{-4} pascal) the emission current is regulated at 10 milliamperes, whereas, at high pressures (such as 10^{-4} torr/10^{-2} pascal) ion current is regulated at 1 microampere (figure 4.3). The CPU partially controls the filament regulator by enabling regulation of the ion current at higher pressures than 10^{-5} torr/ 10^{-3} pascal. The reference voltage (10.0 volts) serves as a standard for the regulation.

Figure 4.3 Filament regulation

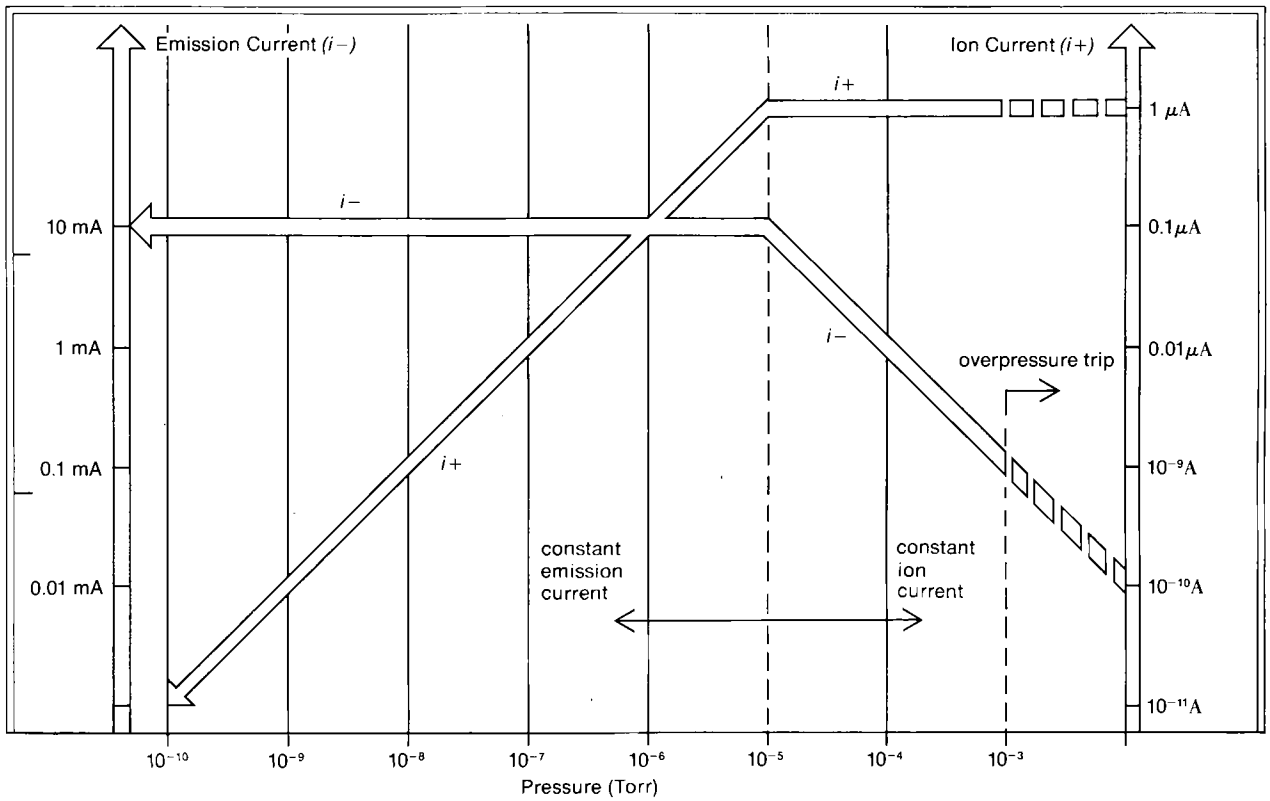

4.3.5 (continued)

The output of the regulator, an error signal, is amplified by the error amplifier. This action provides the loop gain of the filament regulation; its time constants help stabilize the loop. The amplified signal is applied to the pulse-width modulator.

4.3.6 Page 7: Electrometer

The electrometer PC board converts the positive ion current flowing in the ionization gauge tube collector lead into a voltage that can be used in the filament regulator circuitry and read by the CPU. The gain of the electrometer circuit is set by the CPU, as the CPU acquires electrometer output data. Four gains are possible, each gain change being a factor of 10. At gain A (the lowest gain) 1×10^{-6} amperes (1 microampere) at the input produces 5 volts at the electrometer output. At gain D (the highest gain) 1×10^{-9} amperes (1 nano-ampere) at the input produce 5 volts at the electrometer output.

The collector lead of the ionization gauge tube is connected to the collector input of the VersaVac gauge through the BNC connectors on the rear panel. The BNC connectors connect to the electrometer PC board input (A). The protection circuit (B) has no effect during normal operation of the ionization gauge tube. Under a fault condition, such as improper ionization gauge tube hookup, however, the circuit helps protect the amplifier (C) from damaging voltages and/or currents. The protection circuit also helps attenuate high frequencies at the input (A).

The amplifier (C) and programmable resistor (D) form a current-to-voltage converter with programmable gain. The amplifier is a low-input current, high open-loop gain, and low-drift operational amplifier, whose characteristics allow operation with very-high-feedback resistors (up to 1000 megohm). The CPU controls the gain by programming the feedback resistor (D). An offset adjustment is provided for the amplifier (C).

4.3.6 (continued)

The output of the current-to-voltage converter is amplified (E) by a factor of 5. The amplifier (E) also inverts the normally negative voltage at the output of the current-to-voltage converter into a positive voltage for the electrometer output (F).

4.3.7 Page 8: Thermocouple Gauge Tube Circuits

The 5 thermocouple gauge tube circuits (TC1 through TC5) are identical to the one described below.

Power to drive the thermocouple gauge tube heater is produced by a 1-kilohertz sine-wave generator. The 1 kilohertz is removed easily from the thermocouple signal in the amplifier stages, as described below. A Wien bridge operational-amplifier oscillator produces the 1-kilohertz sine wave. That signal, slightly attenuated, is fed to a current-booster amplifier to power all impedance transformers. The impedance transformers power the thermocouple gauge tube heaters. The output of the 1-kilohertz sine-wave generator is a nominal 7.2 volts rms.

The 1-kilohertz sine wave goes to the zero-scale adjust, which allows low-scale adjustment of the thermocouple gauge tube (section 5). The impedance transformer is then fed an attenuated 1-kilohertz signal.

The impedance transformer matches the 1-to-2-kilohms input-circuit impedance to the low impedance of the thermocouple gauge tube heater (approximately 18 ohms). The output of the impedance transformer is effectively center-tapped at circuit ground potential. This action provides a virtual ground at the center of the heater (the thermocouple junction).

The output of the thermocouple gauge tube is amplified by a factor of 1000, including filtering and protection circuitry.

4.3.7 (continued)

NOTE

An adjustment on this amplifier makes it possible to calibrate the thermocouple gauge tube at higher pressures such as 1000 microns.

The amplified thermocouple signal then goes to a low-pass filter section of the circuitry, which has unity gain at dc. The filter provides a second-order low pass having a cutoff frequency of 16 hertz. Thus, the 1-kilohertz component, as well as any line-frequency harmonics present at the thermocouple output of the tube, are eliminated.

The filtered thermocouple signals go to the data-acquisition system on the CPU board, through which the CPU reads the thermocouple gauge tube signals (figure 4.1, page 11).

4.3.8 Page 9: Central Processing Unit PC Board

The CPU is the brain of the VersaVac gauge. The power-on reset circuit gives the CPU a starting point at power-on and keeps the output ports inactive until the CPU starts to execute the program. When power fails, this circuit puts the CPU into a reset condition in order to retain the set-point locations in RAM.

A 4-megahertz crystal supplies the CPU with a stable clock source, which is divided into the 1-megahertz system clock E.

The input from the zero-crossing detector on the power supply board provides a line-synchronized waveform. The 50/60-hertz jumper selects whether to divide this input by 5 or 6. At a 60-hertz power input, the zero-crossing detector frequency is 120 hertz. The input is divided by 6 to produce a 20-hertz signal (a 50-millisecond period). At 50-hertz input power the zero-crossing detector frequency is 100 hertz. This 100-hertz input is divided by 5 to produce a 20-hertz signal (a 50-millisecond period). The 50-millisecond clock

4.3.8 (continued)

goes through a 1-shot circuit to produce a 100-microsecond-duration interrupt request to the CPU every 50 milliseconds. The interrupt routine prompted by this signal contains many VersaVac gauge software subroutines.

The CPU sends out address information, which is buffered and then sent to the input/output devices, to ROM, to RAM, and to the decoding and control circuitry.

The CPU sends and receives data in 8 bits, buffered by data bus buffers that interface the CPU to ROM, RAM, input and output ports.

The ROM contains a maximum of 8K bytes of program. All of the software personality of the VersaVac gauge is stored in these ROM.

The CPU uses RAM for storage of set points, parameters, and registers. The RAM, a low-power CMOS type, enables long-term storage of set point values under power-down conditions, using a NiCd battery.

4.3.9 Page 10: Front Panel Input Ports

Input port 0 interfaces some of the display PC board pushbutton switches. The thermocouple TC1, set point 1 switch is the LSB (least-significant bit) on port 0; rate-of-change switch is the MSB (most-significant bit).

Input port 1 interfaces other display PC board switches. The IG1 SET POINTS switch is the LSB; the keylock PROGRAM switch is the MSB.

Input port 2 also interfaces display PC board switches. The TC1/TC3 switch is the LSB.

The CPU reads these input ports when they are addressed through the decoding and control circuitry. The inputs of each port are sent to the CPU via the data bus.

4.3.10 Page 11: CPU PC Board, Data Acquisition

The data-acquisition system on the CPU board allows the CPU (an 8-bit digital machine) to read analog inputs. It reads the following 8 analog signals: IG ion current (from the electrometer), IG emission current (from the programmable-gain amplifier), TC1 pressure, TC2 pressure, TC3 pressure, TC4 pressure, TC5 pressure, and the reference voltage (10.0 volts dc). The CPU selects which analog signal to read, via the analog multiplexer. The analog multiplexer applies the selected signal to the buffer, and then to the A-D (analog-to-digital) converter. The CPU starts the A-D converter, which converts a 0-to-10-volt input into a 00-to-FF (hex) digital number. The conversion takes a maximum of 40 microseconds, after which the CPU reads the digital number via port 3.

Port 3 is read by being selected by the decoding and control circuitry. Its inputs are sent to the CPU via the data bus.

4.3.11 Page 12: Input Port 4

Input port 4 contains signals from the A-D converter, the rear panel inputs, the ionization-gauge-tube-type-select switches, and the grid voltage monitor. The rear panel inputs are listed below.

a) request rate-of-change data

b) filament disable

c) filament go on

d) request data equal pascal

The CPU reads input port 4 by addressing it through the decoding and control circuitry. The inputs are sent to the CPU via the data bus.

4.3.12 Page 13: Front Panel Output Ports

Output port 0 is the front-panel digital-display mantissa. The lower nibble is the LSD (least-

4.3.12 (continued)

significant digit); the upper nibble is the MSD (most-significant digit).

The lower nibble of output port 1 is the front-panel digital-display exponent. The upper nibble of output port 1 interfaces display-board LED indicators.

The lower nibble of output port 2 is not used; the upper nibble interfaces various display-board indicators.

The CPU writes to these output ports by addressing each one through the decoding and control circuitry. The output ports receive the CPU output via the data bus.

4.3.13 Page 14: CPU Output Ports

Output port 3 interfaces various display-board LED indicators.

Output port 6 interfaces the degas-on switch block, the filament on circuits, and the ionization gauge filament regulator, located on the power supply PC board. Output port 6 also controls the A-D converter (page 11), selects the analog multiplexer (page 11), and blanks the digital-display exponent on the display PC board.

Output port 7 selects the gain of the electrometer (upper nibble) and the gain of the emission current programmable-gain amplifier on the power supply PC board (lower nibble).

The CPU writes to these output ports by selecting each one through the decoding and control circuitry. The CPU output is sent to the port outputs via the data bus.

4.3.14 Page 15: Bar Graph Display

Output ports 4 and 5 interface the lower and upper bar graph displays, respectively. The CPU writes to

4.3.14 (continued)

each bar graph a binary number exactly equal to the number of segments in the bar graph to be illuminated. (Each bar graph has a total of 201 segments.) The 8-bit comparators on each output port compare the number of 8-bit segments to be illuminated to the number on the binary counter. The number on the binary counter equals the number of bar graph segments counted. The comparator determines when the bar graph is enabled, thus determining the length of the bar graph.

The 18-kilohertz oscillator runs both the binary counter and the 5-phase generator. The 5-phase generator produces a nonoverlapping 5-phase output to the bar graph display (only 1 phase is high at a time). The sequence, which repeats, is: phases 1, 2, 3, 4, 5; 1, 2, 3, 4, 5;... The binary counter increments its count every clock cycle.

After the full-count comparator determines when the count has reached 201 segments, it produces a reset signal to initialize the binary counter, the 5-phase generator, and the reset-cathode of the bar graph.

The gas-discharge bar graph display runs on 250 volts dc.

DANGER

Be careful not to touch the 250-volts power supply. Not only can there be a shock, but people and equipment can be endangered by the sudden reaction to a shock.

4.3.15 <u>Page 16: CPU PC Board Analog Voltage Output</u>

The analog output on the rear-panel DATA CONNECTOR is controlled by the CPU, using a D-A converter. The CPU addresses D-A output port 8 through the decoding and control circuitry. The CPU output goes to the D-A latch via the data bus. The D-A converter divides the CPU output by 256 decimal (100 hex) and multiplies by the 10.0-volt reference voltage.

4.3.15 (continued)

Thus, for example, 80 hex (128 decimal) produces a 5-volt output. The maximum output voltage is the FF/100 hex, or 255/256 decimal, multiplied by 10.0 volts = 9.96 volts dc.

The output impedance is 220 ohms.

4.3.16 Page 17: CPU PC Board Optoisolator Outputs, Ports 9 and 10

Output ports 9 and 10 interface the rear-panel output on the DATA CONNECTOR. The 2 ports give a total of 16 individually optoisolated ionization gauge outputs. The drivers interface the TTL (transistor-transistor logic) outputs of the ports to the LED inputs of the optoisolators. The outputs are listed below:

MANTISSA	EXPONENT	Data is increasing Rate of change exceeded
1	1	IG1 is on
2	2	IG2 is on
4	4	
8	8	
10		
20		
40		
80		

The CPU writes the output ports (one at a time) by addressing them through the decoding and control circuitry. The CPU output is sent to the output ports via the data bus.

4.3.17 Page 18: Relay Output

Output ports 11 and 12 interface the relay outputs on the rear-panel SET-POINT CONNECTOR. These relays reside on the relay PC board. The CPU writes to these relays by selecting the related output port through the decoding and control circuitry. The CPU output is transferred to the output port via data bus.

4.3.17 (continued)

The relay board contains drivers that interface the TTL outputs of the output ports to the 28-volts dc relay coils. The VersaVac 5 gauge has 10 relays (the VersaVac 2 gauge has 7 relays) for pressure set points: TC1 set point 1, TC1 set point 2, TC2 set point 1, TC2 set point 2, TC3*, TC4*, TC5*, IG set point 1, IG set point 2, and IG tube 1 filament is on.

The VersaVac gauges use 2 kinds of relay board. The standard relay board (drawing 511-0343) accommodates up to 125 volts, using electromechanical relay contacts (normally open, normally closed, and common). The optional solid-state relay board (drawing 511-0373) accommodates only 240 volts ac, using an equivalent to normally open (N.O.) contacts. The 2 kinds of relay board function identically and plug into the same cable and location.

CAUTION

The polarizing key positions on the edge connector differ for the 2 kinds of board, as indicated in section 2.2.4. Be sure to use the correct keying for the relay PC board used in your system.

---

* VersaVac 5 gauge only.

Figure 4.1, page 1 Block diagram index

Interconnect (Tie Point)		Block Diagram Pages
1	Data bus (CPU board-display board)	9, 10, 11, 12, 13, 14 15, 16, 17, 18
2	Port control from decoding section	9, 10, 11, 12, 13, 14, 15, 16, 17, 18
3	Power-on reset	9, 13, 14, 15, 17, 18
4	Zero-crossing detector (refers to ac input power)	4, 6, 9
5	250 volts dc unregulated power supply	4, 15
6	Emission current sense	5, 6
7	Ionization gauge tube switch block	5, 6
8	Electrometer output (ion current signal)	6, 7, 11
9	Emission amplifier output (emission current signal)	6, 11
10	Reference voltage (10.0 volts dc)	4, 5, 6, 11, 16
11	Thermocouple TC1 analog signal	8, 11
12	Thermocouple TC2 analog signal	8, 11
13	Thermocouple TC3 analog signal	8, 11
14	Thermocouple TC4 analog signal	8, 11
15	Thermocouple TC5 analog signal	8, 11
16	180 volts ac, 50 milliamperes power transformer winding	3, 4
17	20 volts ac, 1 ampere power transformer winding	3, 4, 6
18	20 volts ac, 1 ampere power transformer winding	3, 4, 6
19	10 volts ac, 5 amperes power transformer winding	3, 5, 6
20	10 volts ac, 2.5 amperes power transformer winding	3, 5

NOTE: Circled numbers identify block diagram interconnects.

Interconnect (Tie Point)		Block Diagram Pages
21	7.5 volts ac, 8 amperes power transformer winding	3, 5
22	Optoisolated Triac driver	5, 6
23	180 volts dc regulated power supply	4, 5
24	Grid voltage (+180v) OK to CPU input port 4	4, 12
25	Data $\overline{\text{ready}}$ from A-D converter to CPU input port 4	11, 12
26	Select electrometer gain from CPU output port 7	7, 14
27	Select emission current gain from CPU output port 7	6, 14
28	Select analog multiplexer from CPU output port 6	11, 14
29	$\overline{\text{Convert}}$ to A-D converter from CPU output port 6	11, 14
30	Ion current regulate enable from CPU output port 6	6, 14
31	"Filament on" signal from CPU output port 6	4, 14
32	"Degas on" signal from CPU output port 6	5, 14
33	"Select ionization gauge tube IG2" signal from CPU output port 1	5, 13

Printed Circuit Board

1. Power supply	3, 4, 5, 6, 8
2. Electrometer	7
3. CPU	9, 10, 11, 12, 13, 14, 15, 16, 17, 18
4. Display	10, 13, 14, 15
5. Relay	18

Figure 4.1, page 3 Input power distribution

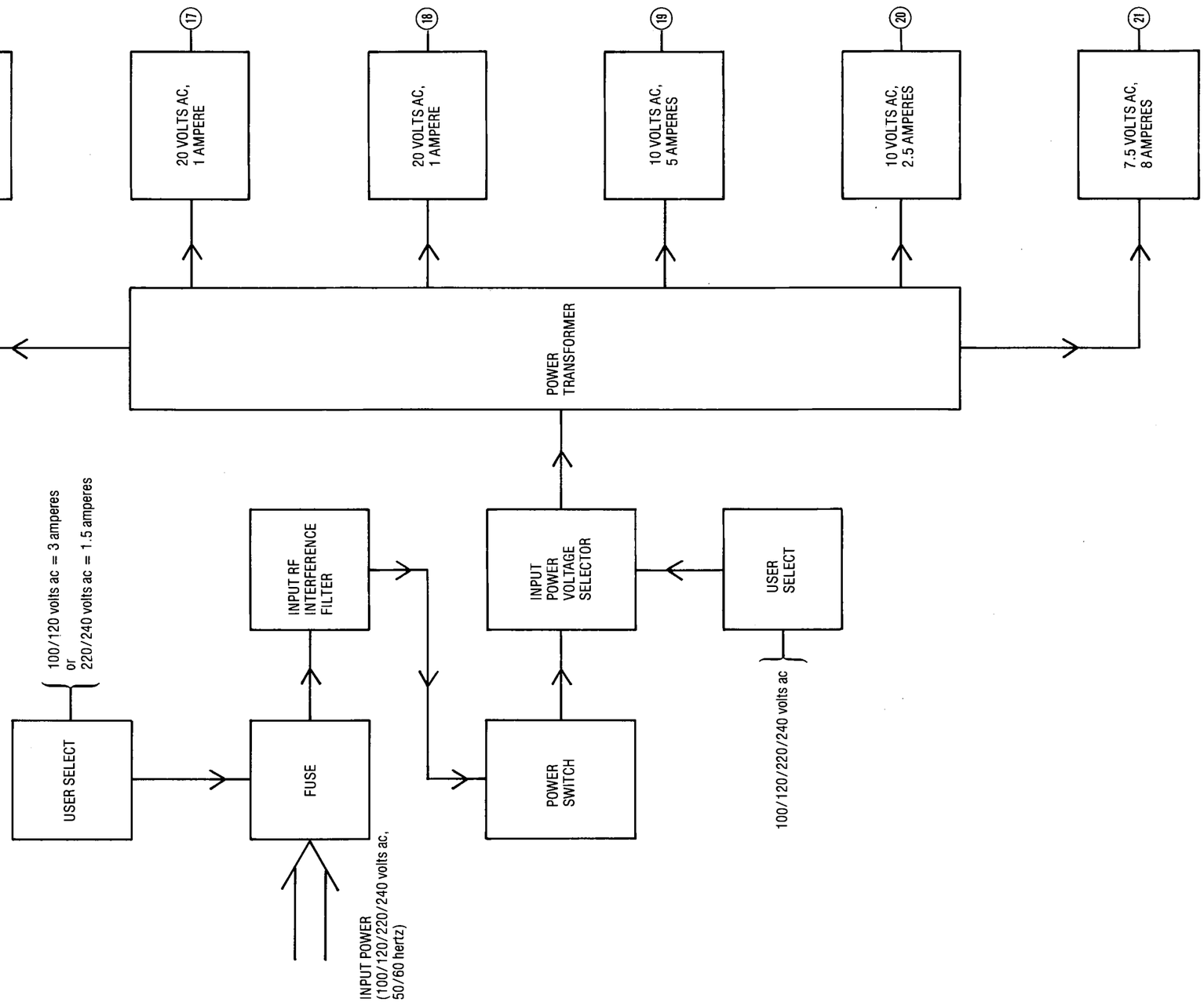

Figure 4.1, page 4 Power supply PC board (partial)

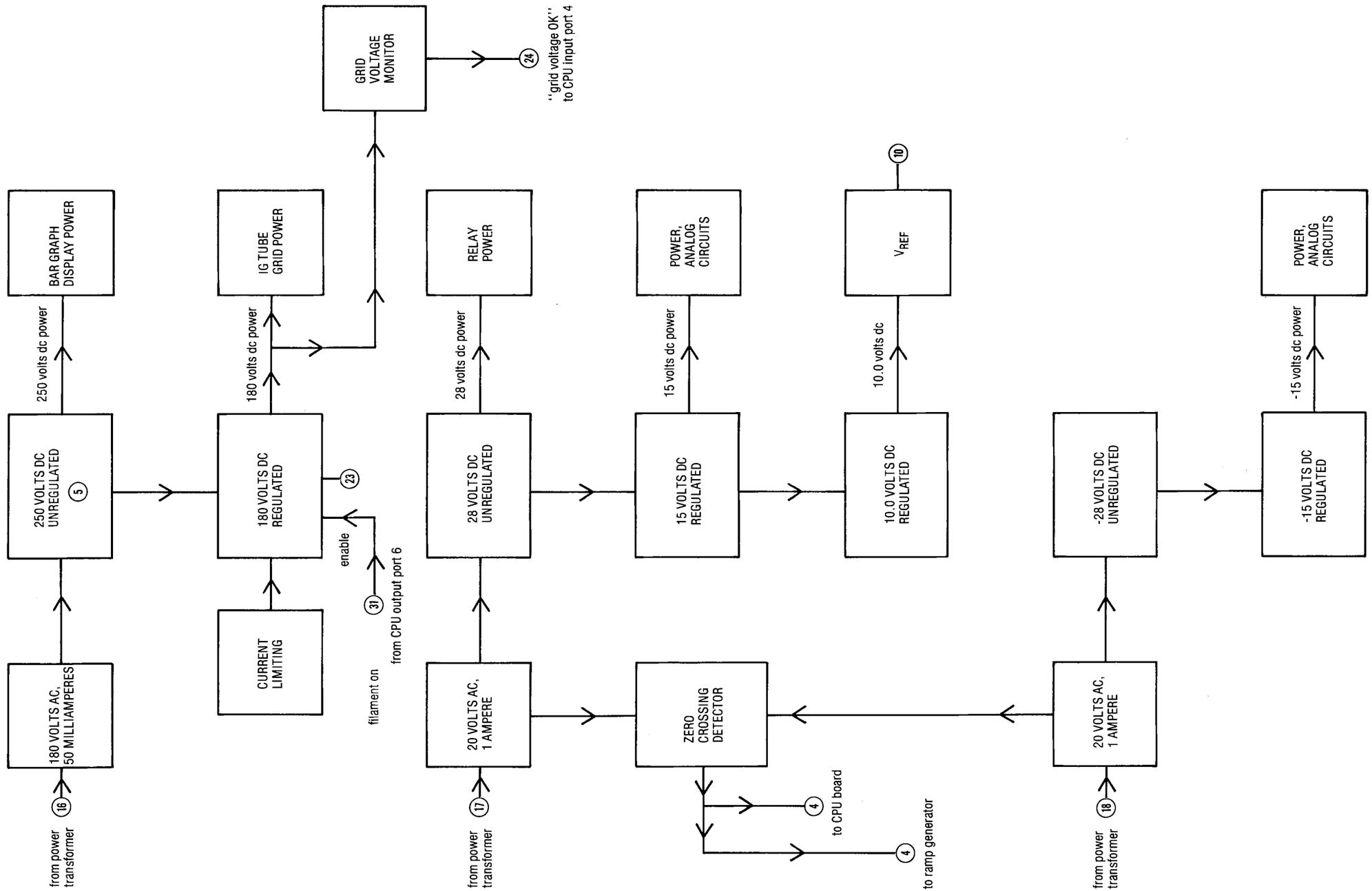

Figure 4.1, page 5 Power supply PC board (partial)

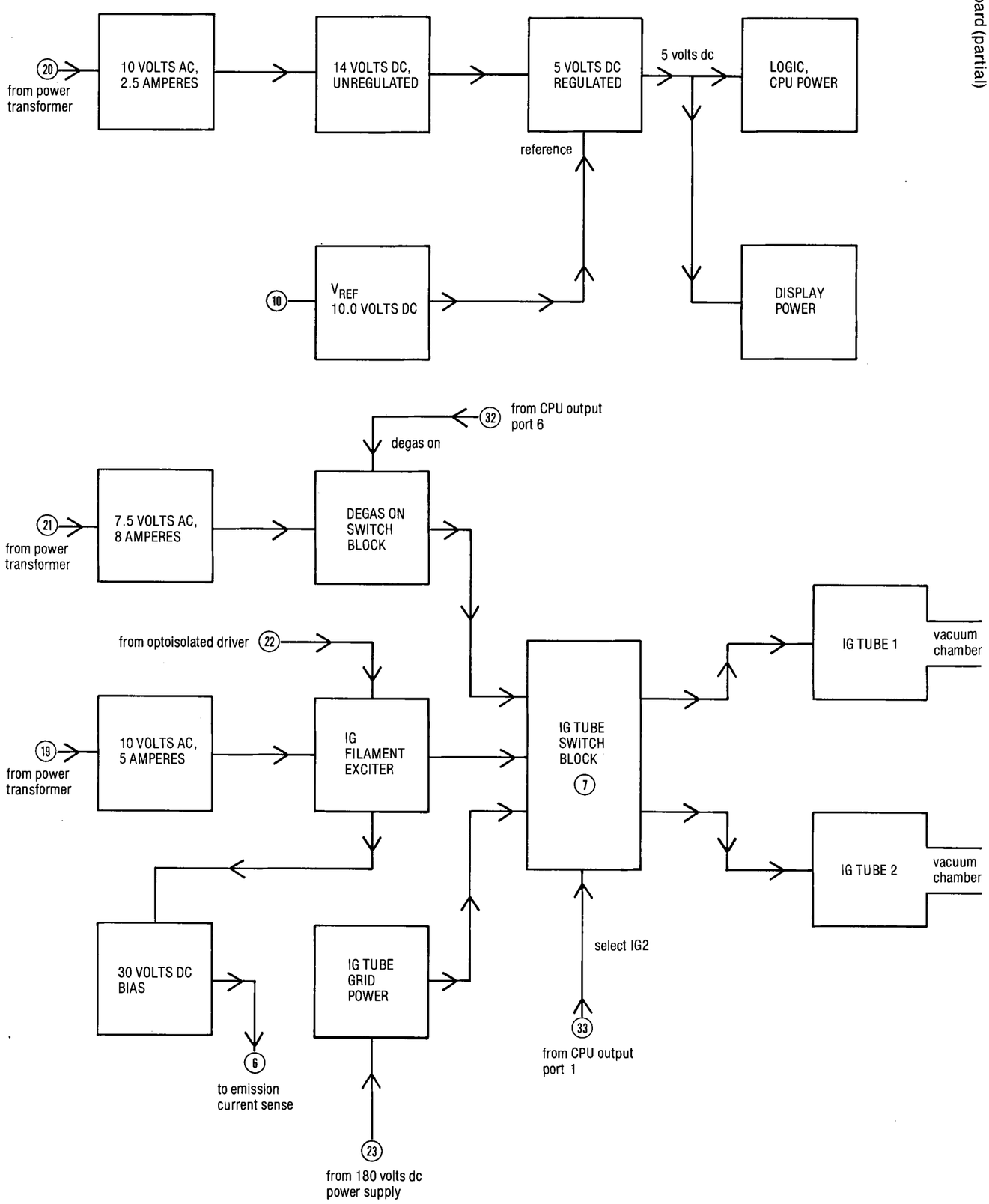

Figure 4.1, page 6 Ionization gauge filament regulator (on power supply PC board)

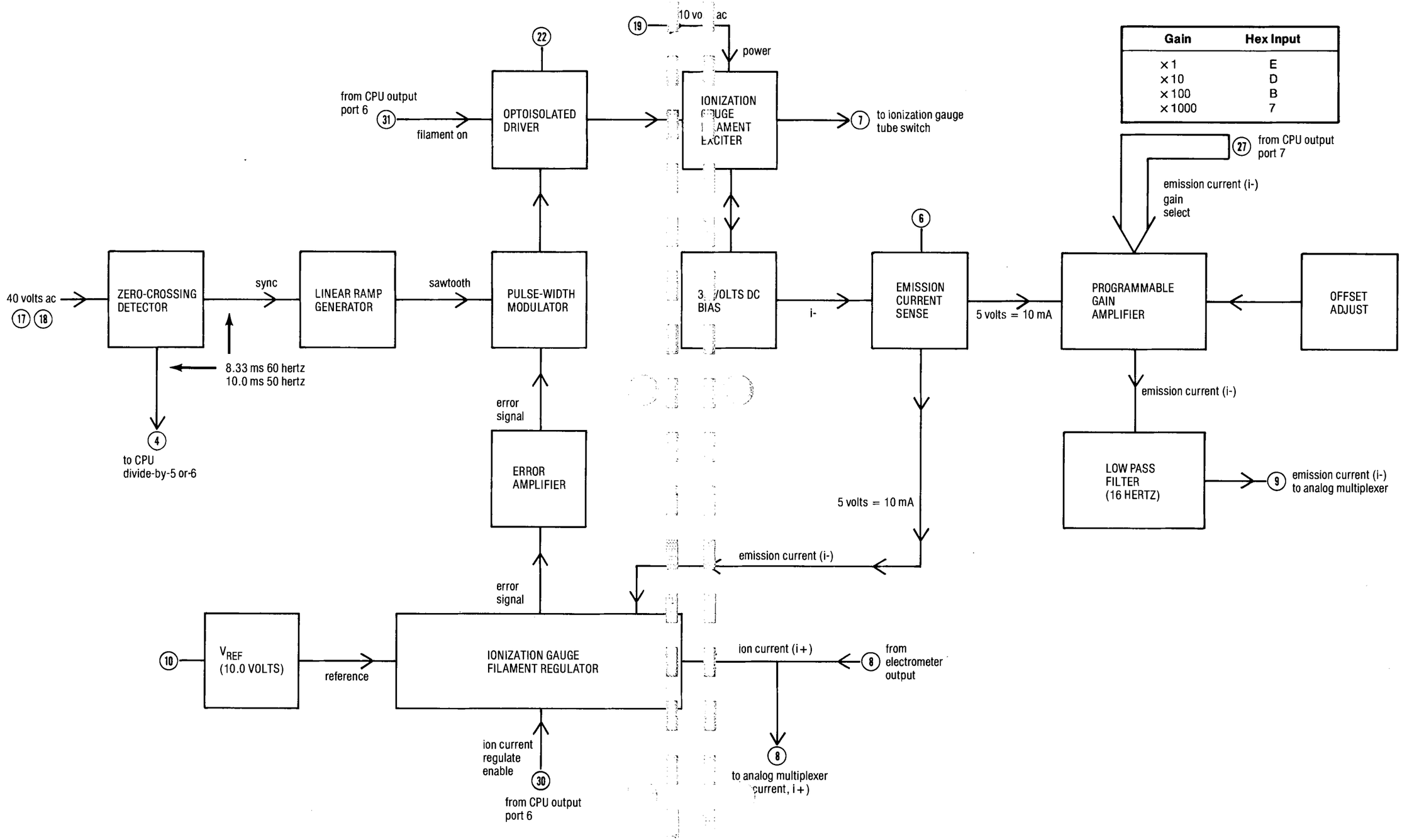

Gain	Hex Input
×1	E
×10	D
×100	B
×1000	7

Figure 4.1, page 7 Electrometer

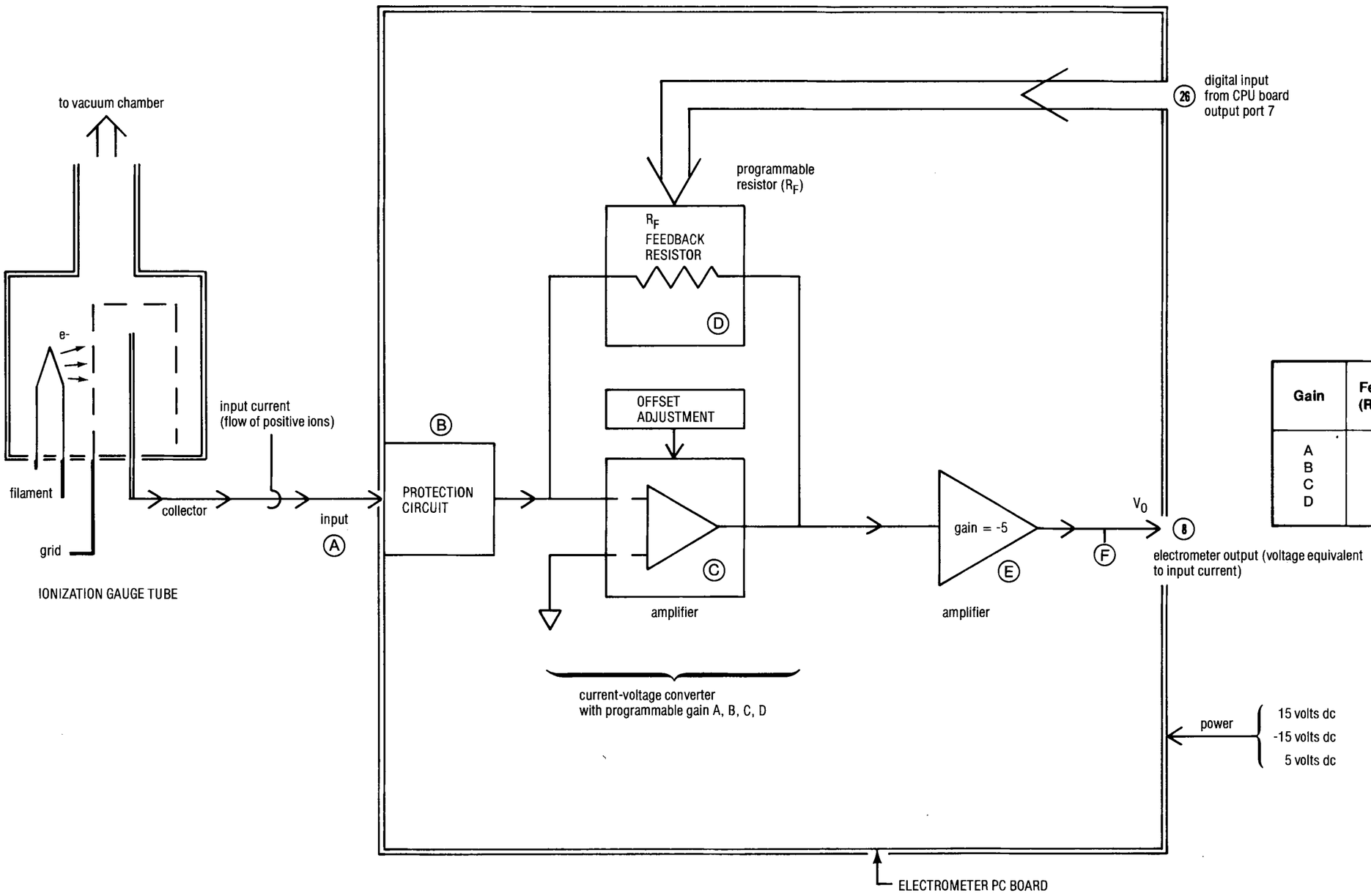

Gain	Feedback Resistor (R_F) Value	Electrometer Output, V_{out}/I_{in} (volts × amperes)
A	1 megohm	5.0×10^6
B	10 megohm	5.0×10^7
C	1×10^8 ohms	5.0×10^8
D	1×10^9 ohms	5.0×10^9

Figure 4.1, page 8 Thermocouple gauge tube circuits (on power supply PC board)

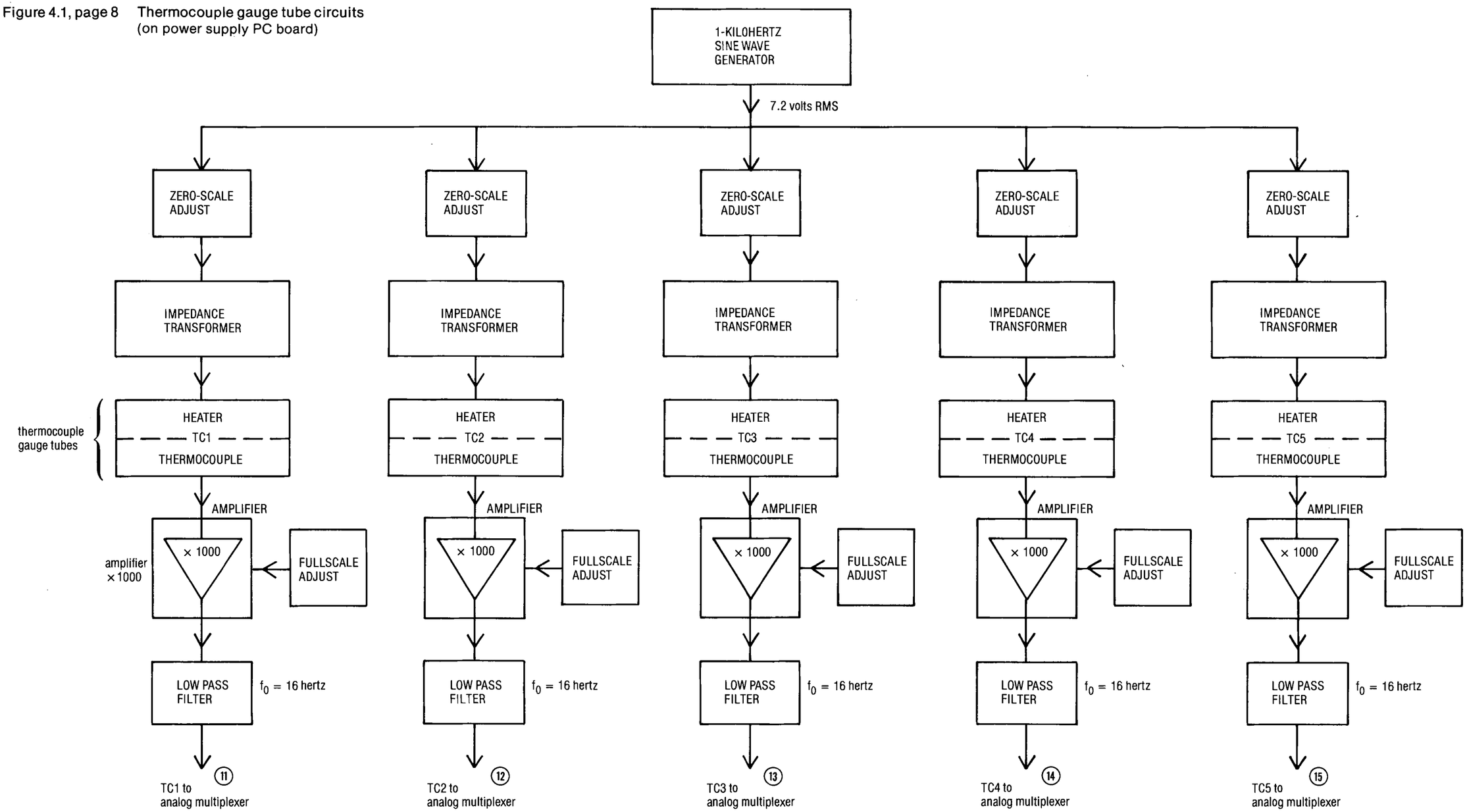

Figure 4.1, page 9 Central processing unit PC board (partial)

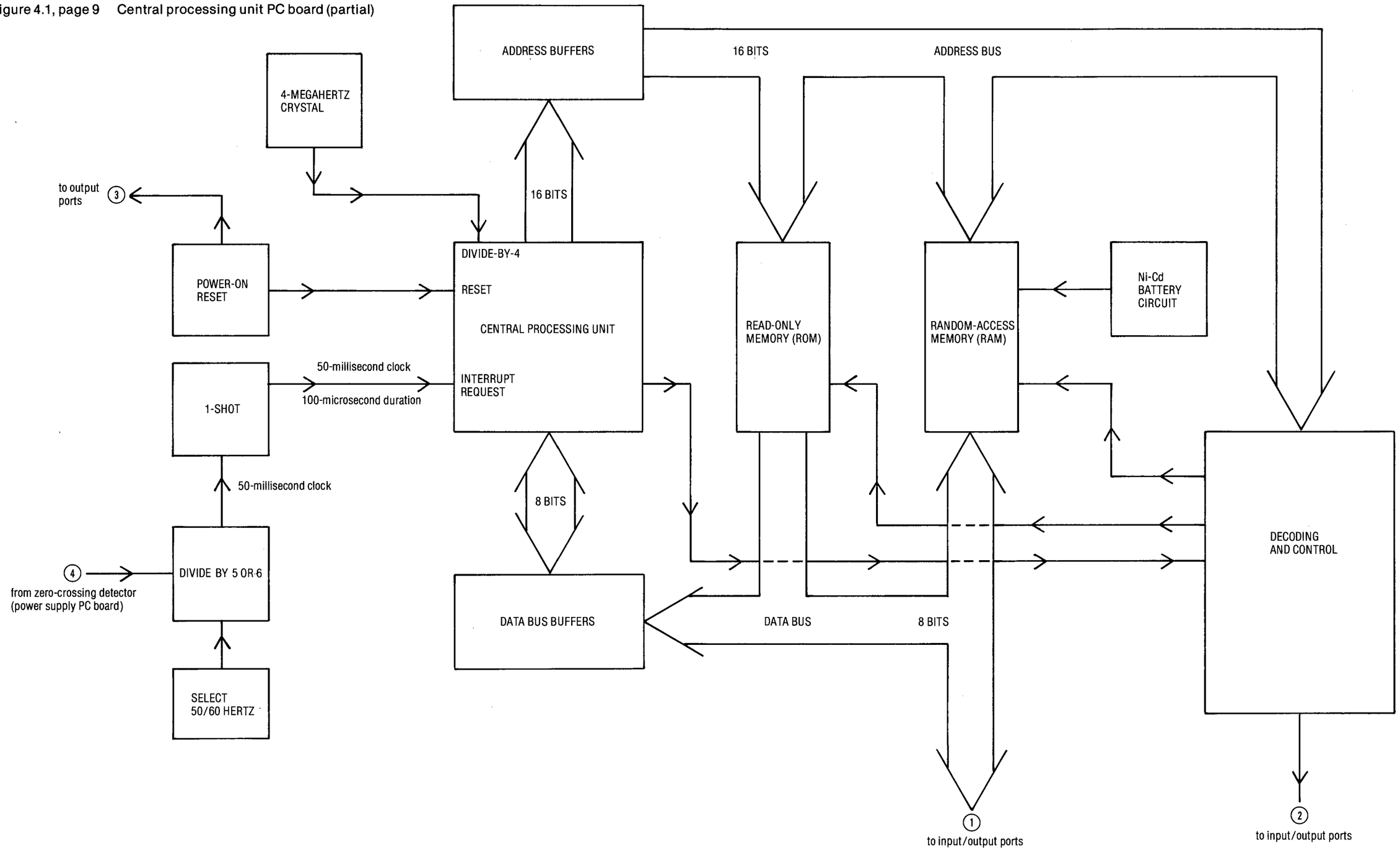

Figure 4.1, page 10 Front panel input ports

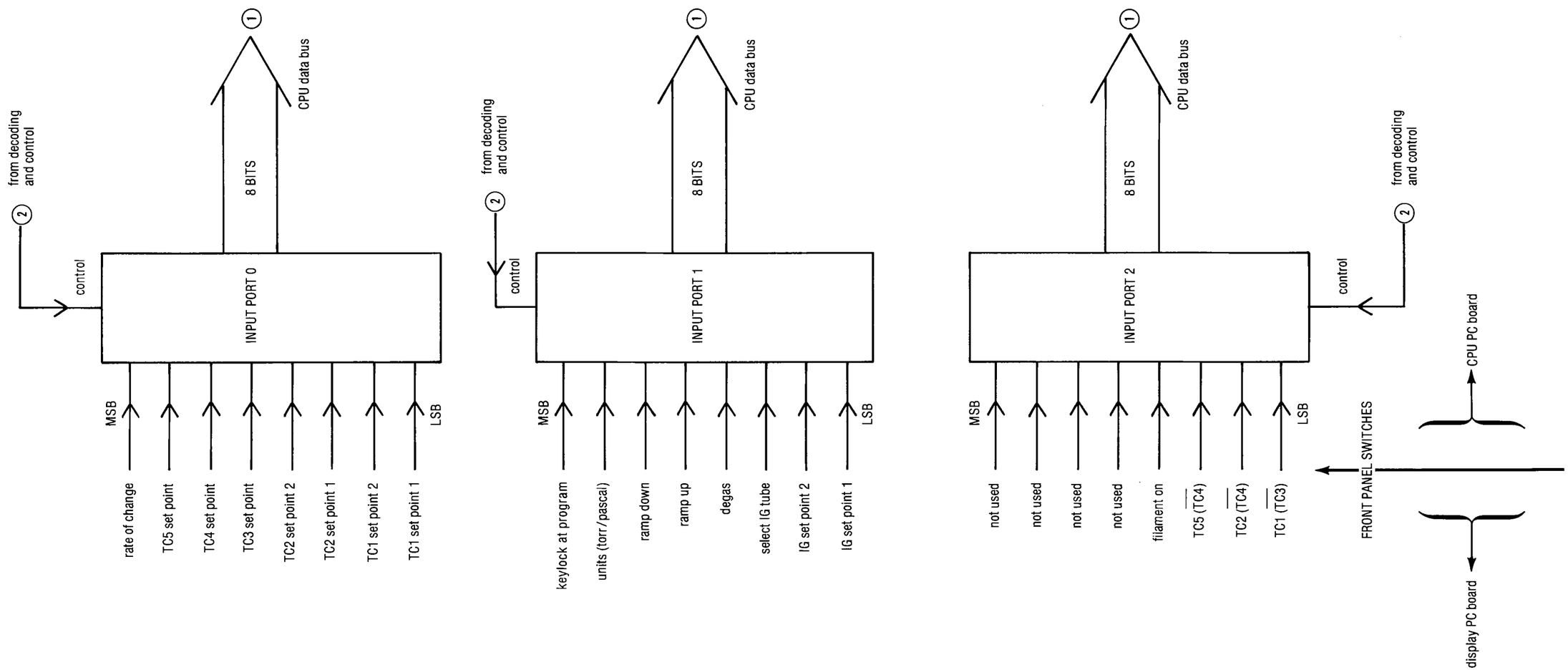

Figure 4.1, page 11 Central processing unit PC board (partial), data acquisition

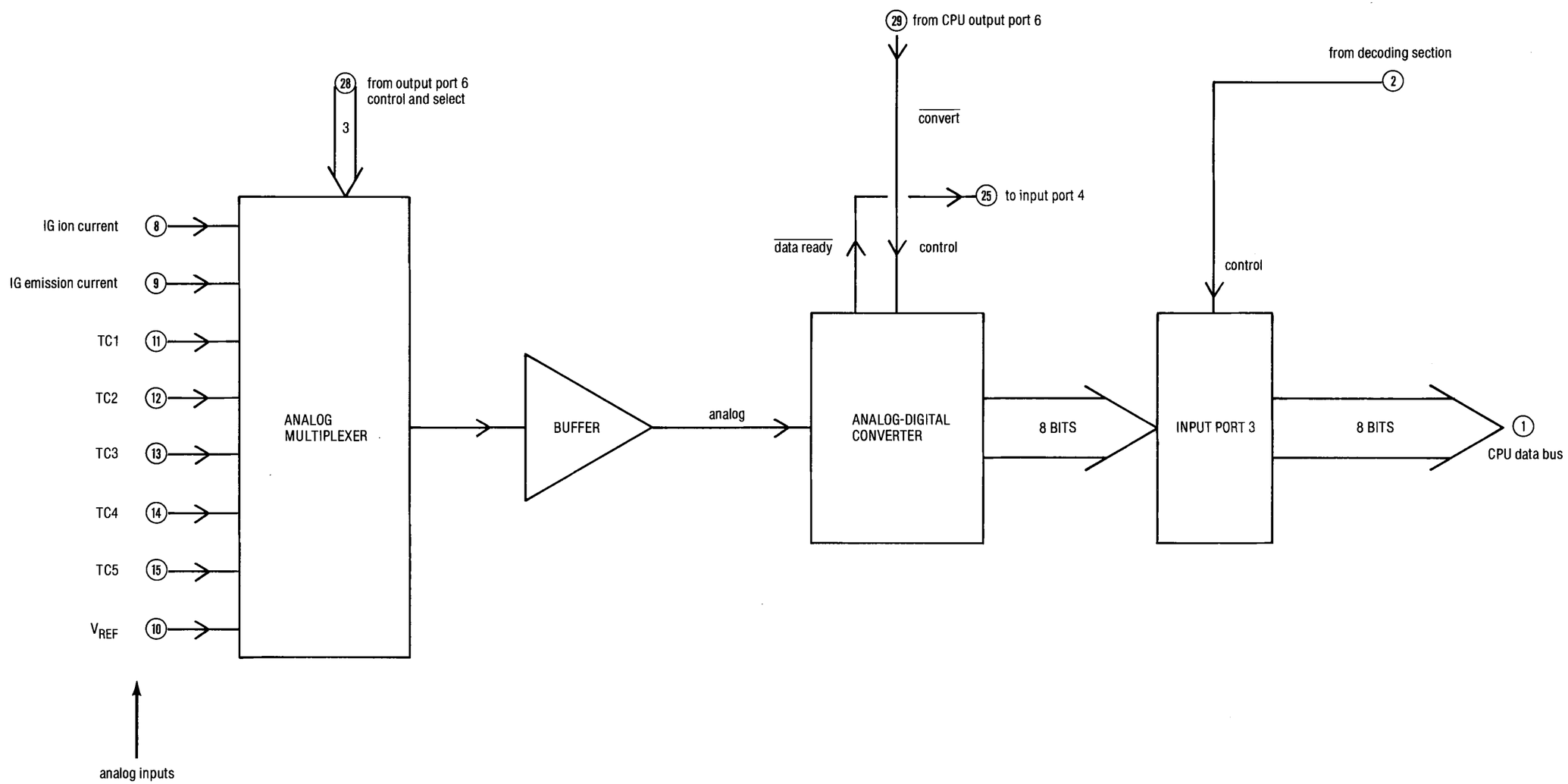

Figure 4.1, page 12 Input port 4 (on CPU PC board)

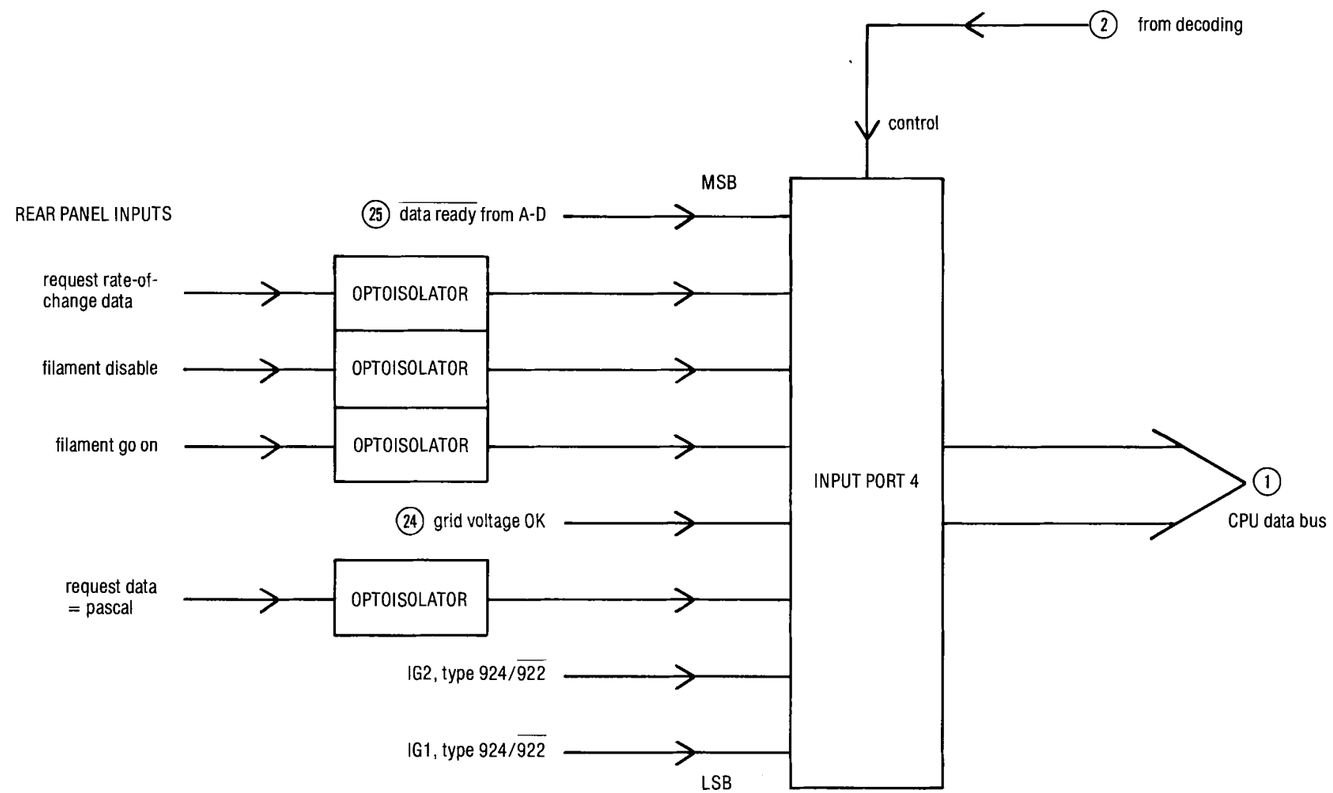

Figure 4.1, page 13 Front panel output ports (on CPU PC board)

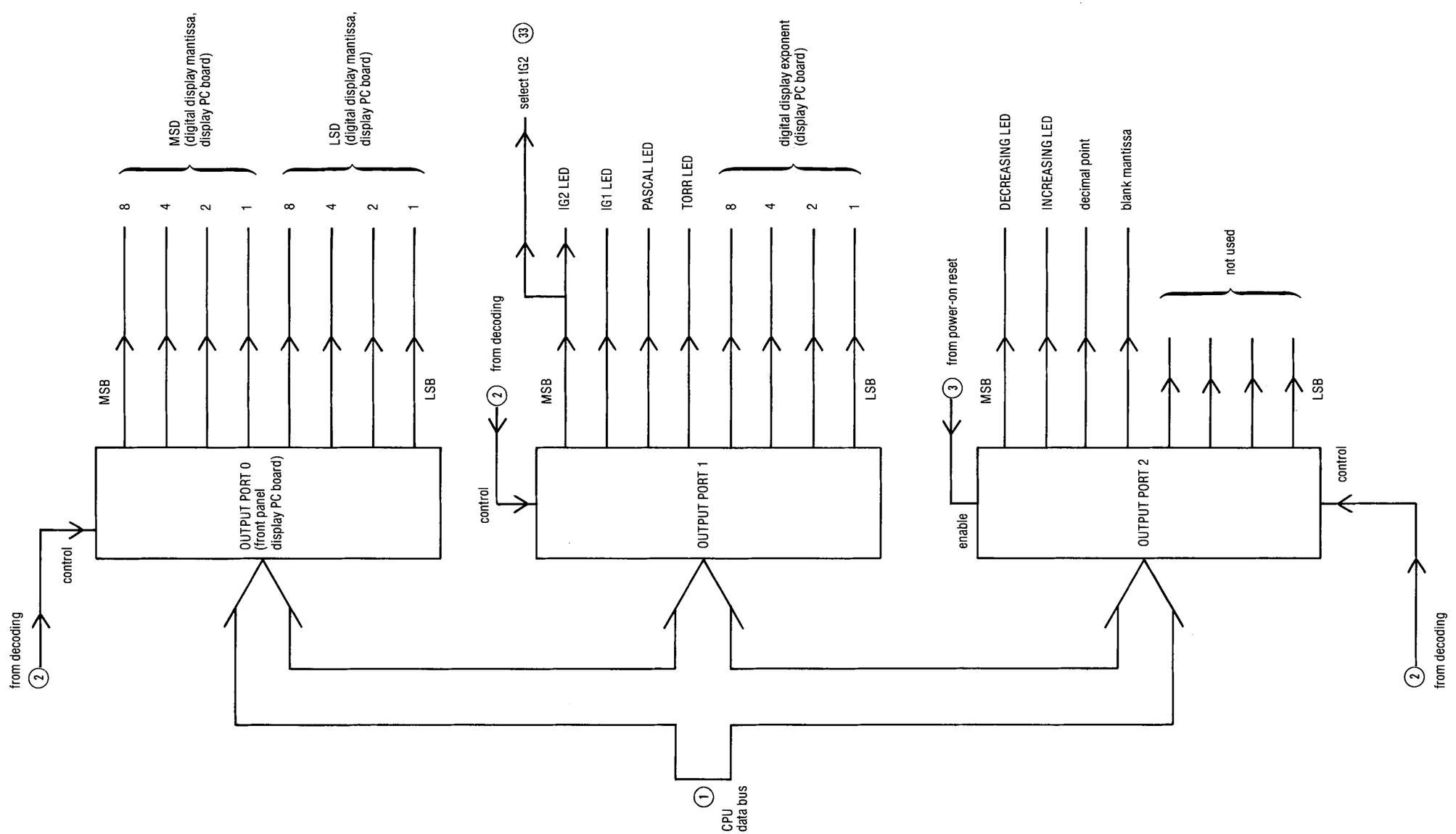

Figure 4.1, page 14 Central processing unit (partial), output ports

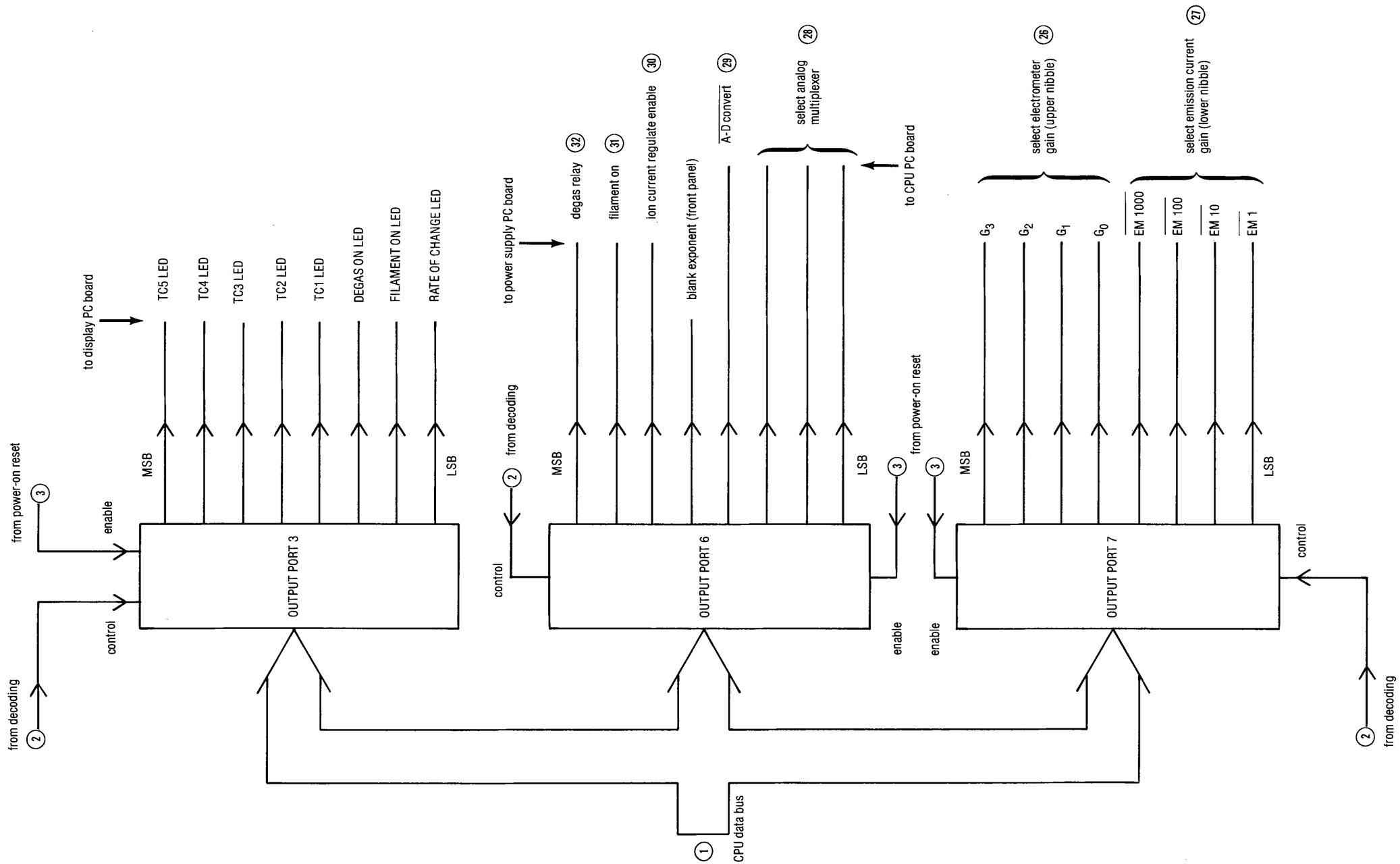

Figure 4.1, page 15 Bar graph display

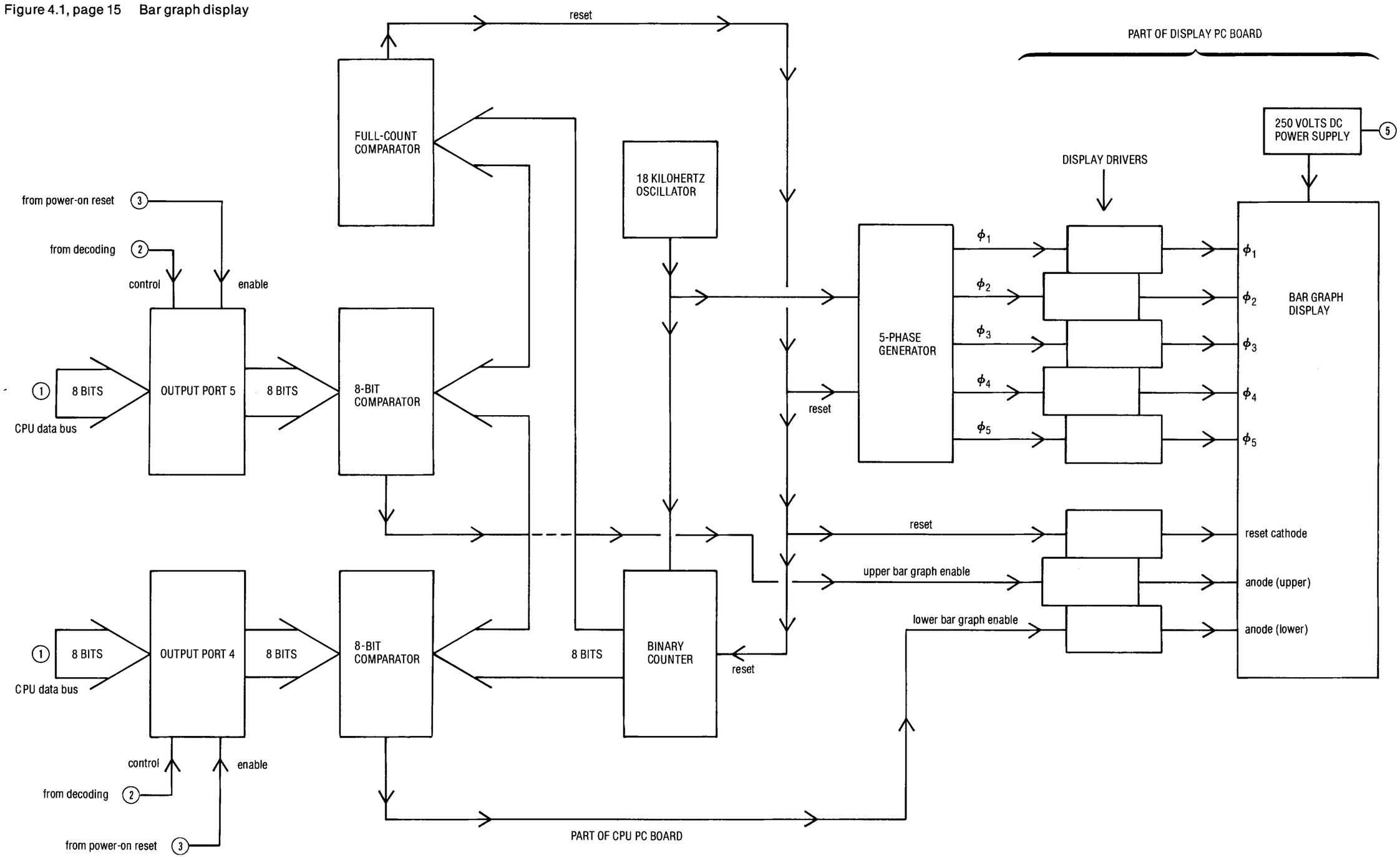

Figure 4.1, page 16 Central processing unit PC board (partial), analog voltage output

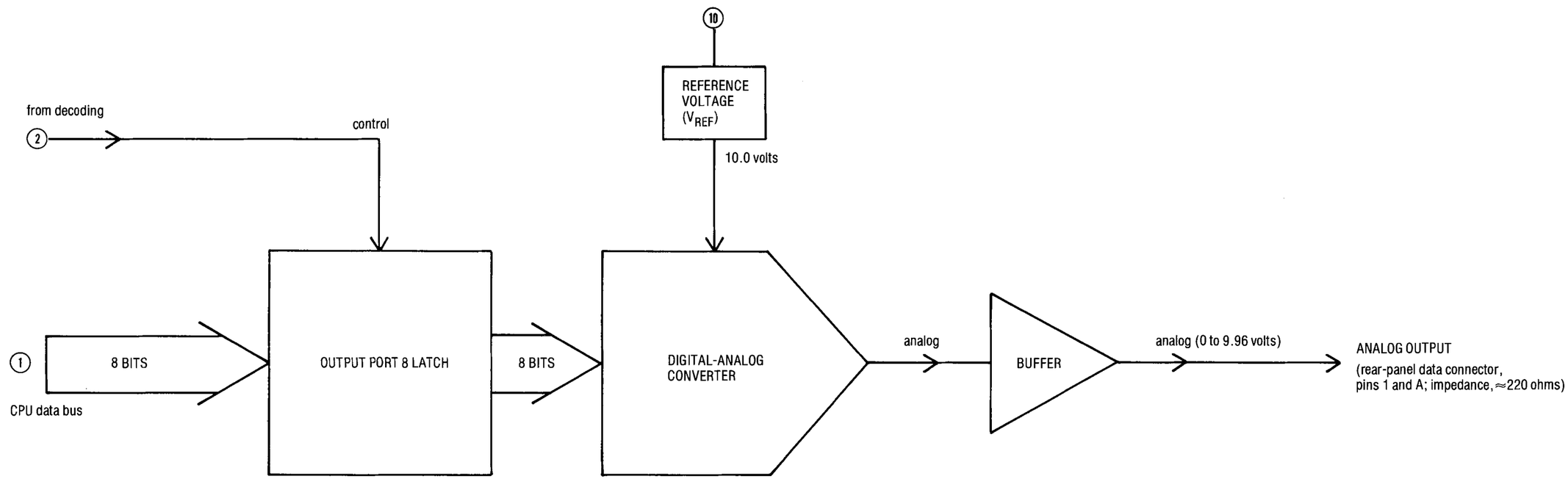

Figure 4.1, page 17 Central processing unit PC board (partial), optoisolator outputs, ports 9 and 10

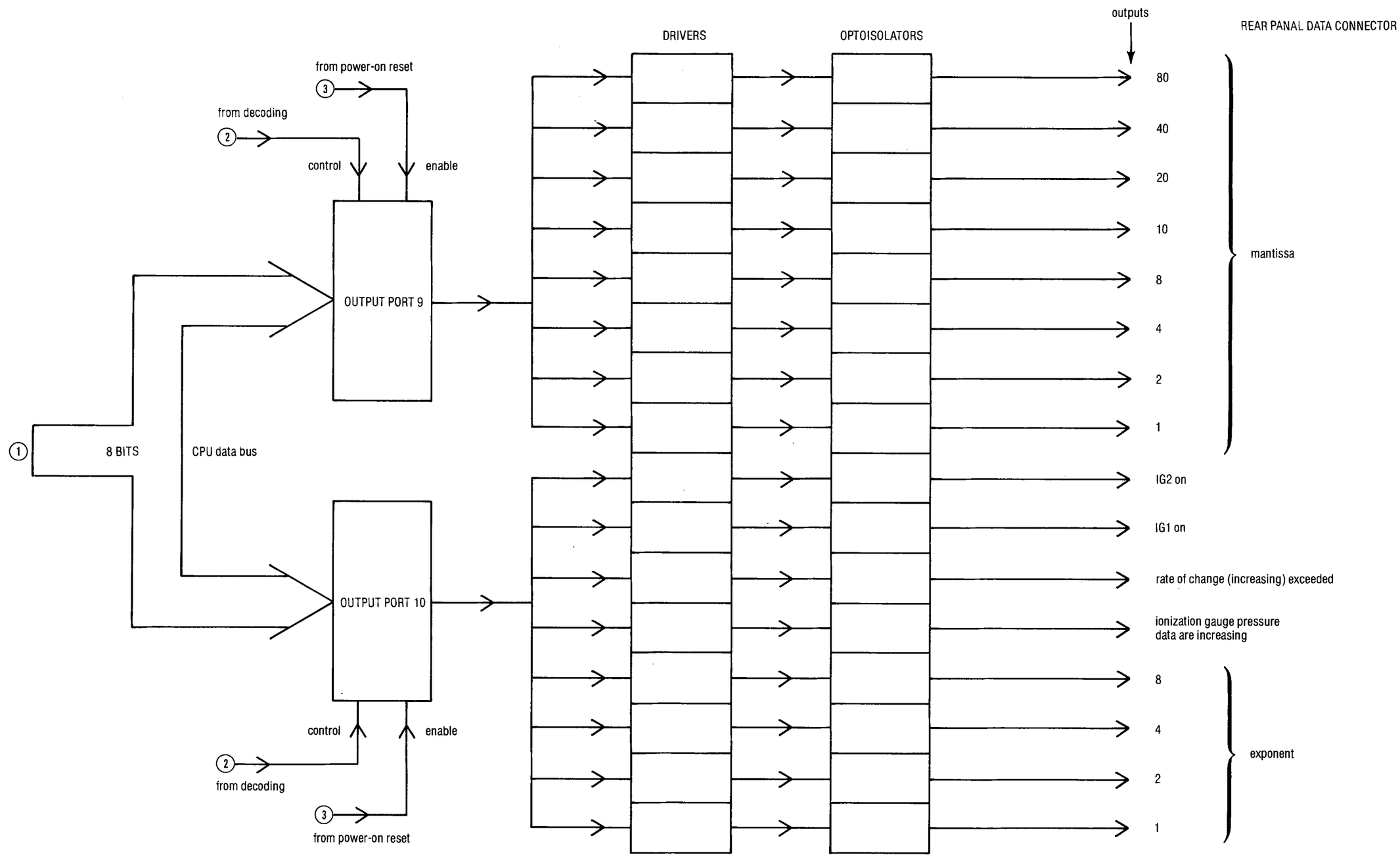

Figure 4.1, page 18 Relay output

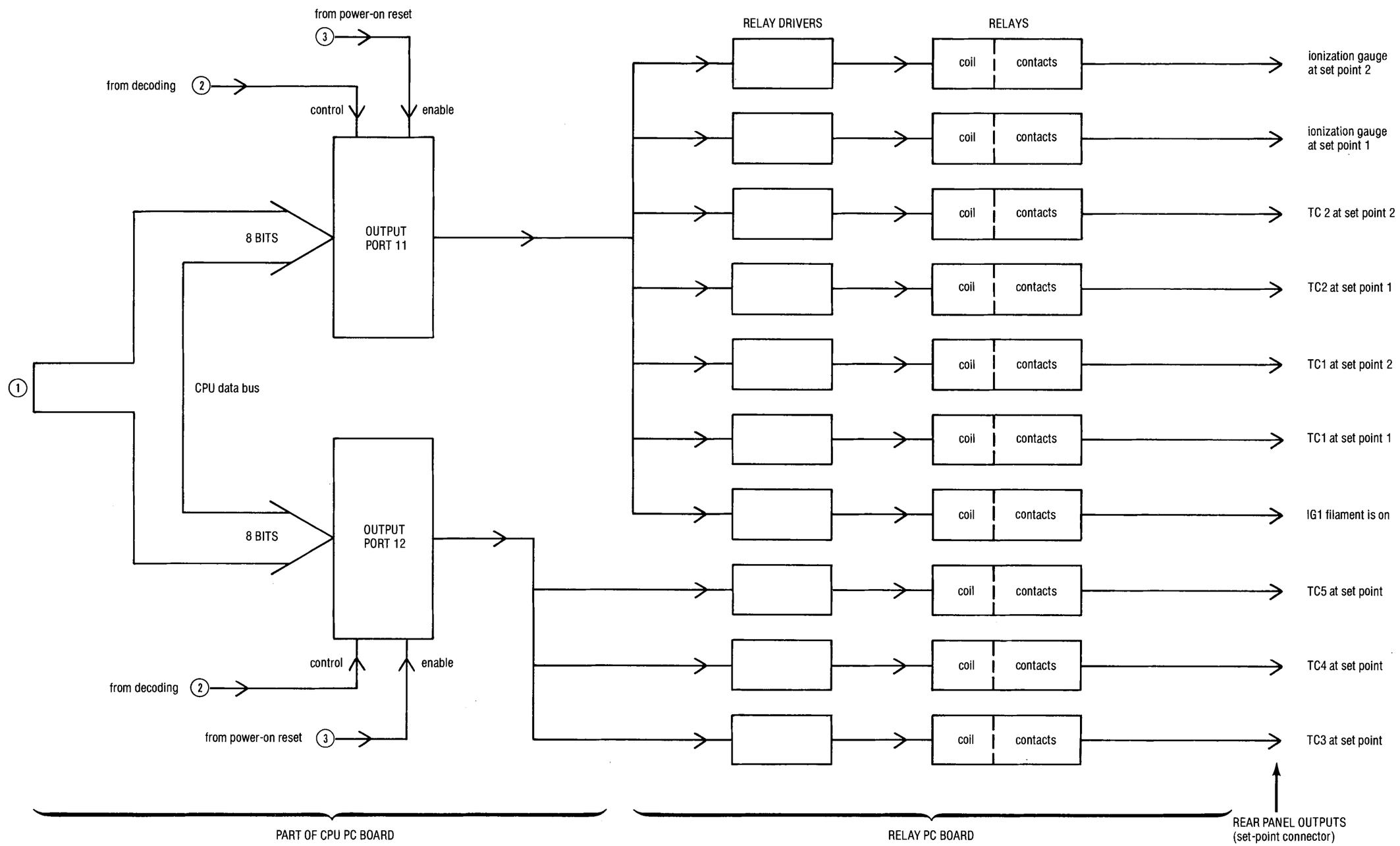

Figure 4.2 Circuit functions

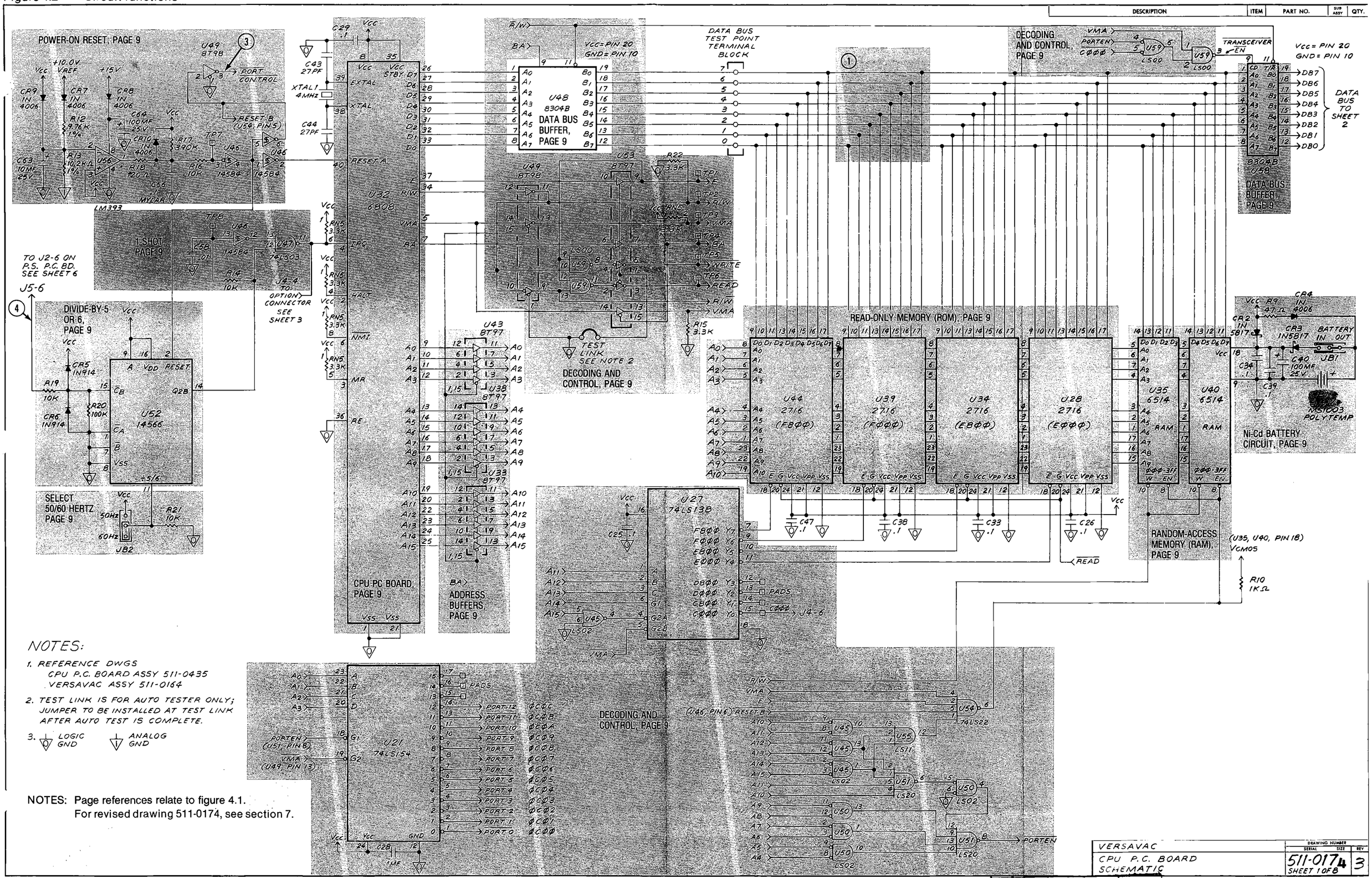

NOTES:

1. REFERENCE DWGS
   CPU P.C. BOARD ASSY 511-0435
   VERSAVAC ASSY 511-0164
2. TEST LINK IS FOR AUTO TESTER ONLY; JUMPER TO BE INSTALLED AT TEST LINK AFTER AUTO TEST IS COMPLETE.
3. LOGIC GND / ANALOG GND

NOTES: Page references relate to figure 4.1.
For revised drawing 511-0174, see section 7.

Figure 4.2 Circuit functions

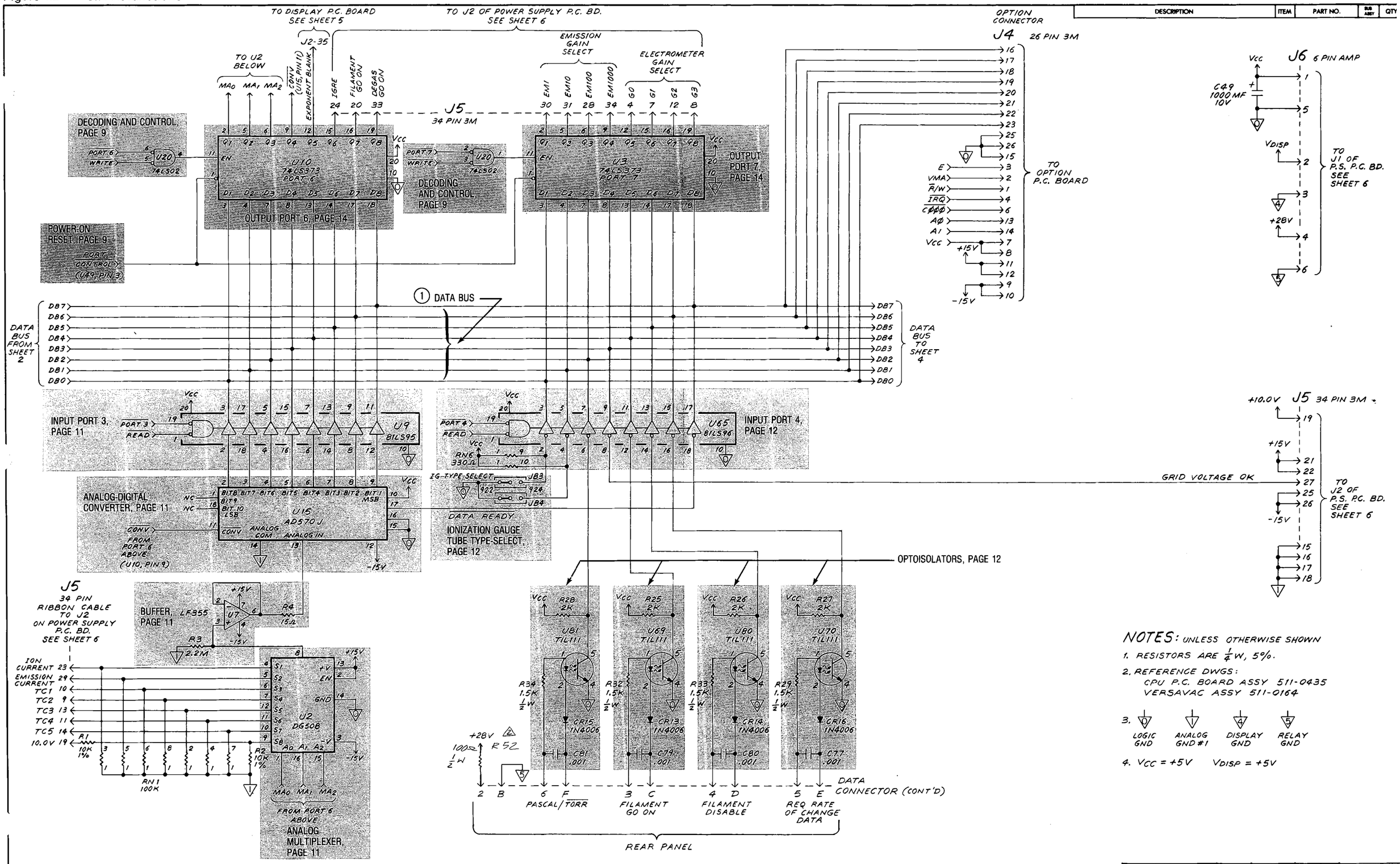

NOTES: Page references relate to figure 4.1. For revised drawing 511-0174, see section 7.

Figure 4.2 Circuit functions

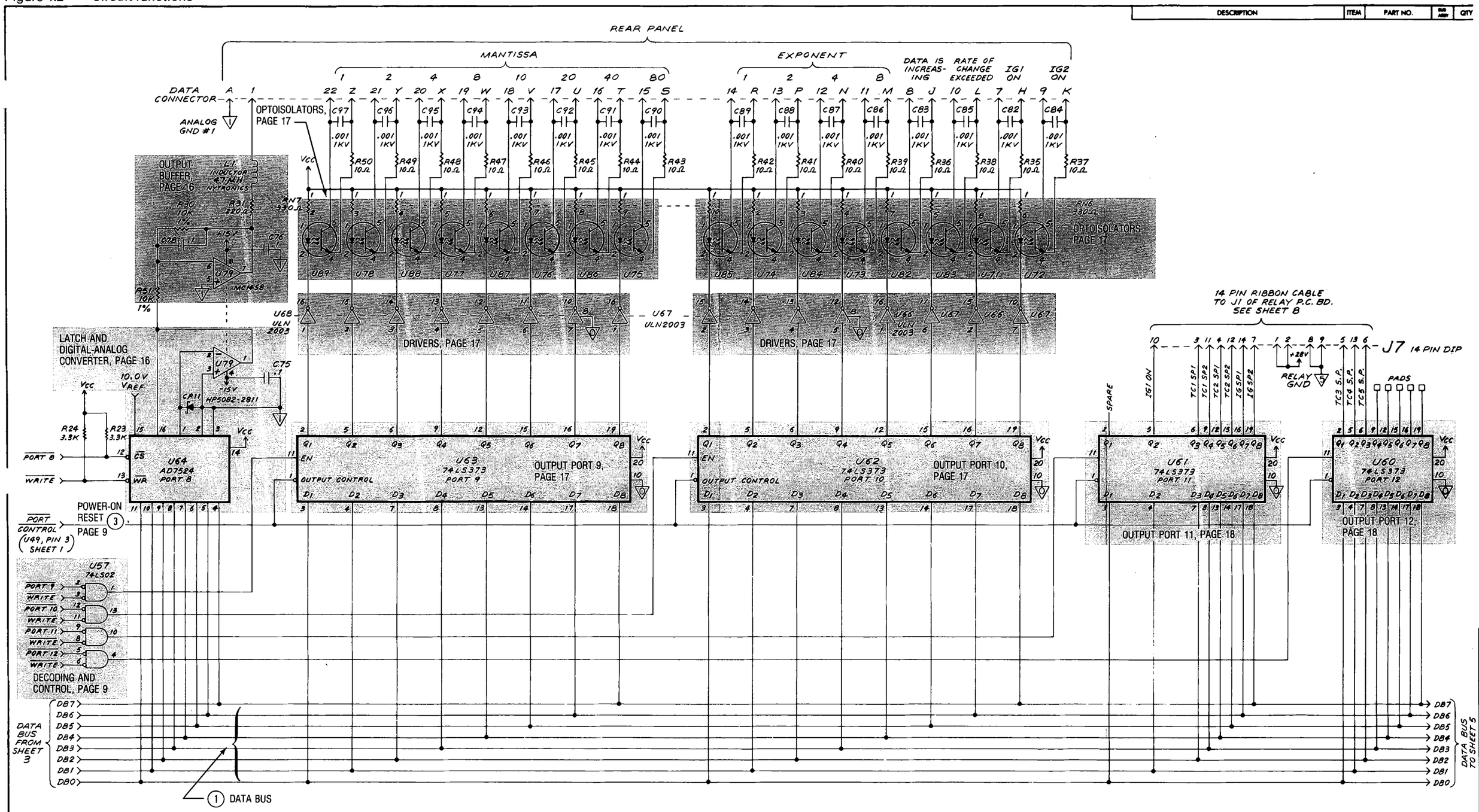

NOTES: UNLESS OTHERWISE SHOWN

1. REFERENCE DWGS:
   CPU P.C. BD. ASSY 511-0435
   VERSAVAC ASSY 511-0164
2. OPTO ISOLATORS ARE TIL111.
3. RESISTORS ARE ¼W, 5%.
4. LOGIC GND / ANALOG GND

NOTES: Page references relate to figure 4.1. For revised drawing 511-0174, see section 7.

DESCRIPTION	ITEM	PART NO.	QTY

VERSAVAC
CPU P.C. BOARD SCHEMATIC
DRAWING NUMBER 511-0174 SHEET 4 OF 8 — REV 3

Figure 4.2 Circuit functions

DESCRIPTION	ITEM	PART NO.	SUB ASSY	QTY.

NOTES: Page references relate to figure 4.1. For revised drawing 511-0174, see section 7.

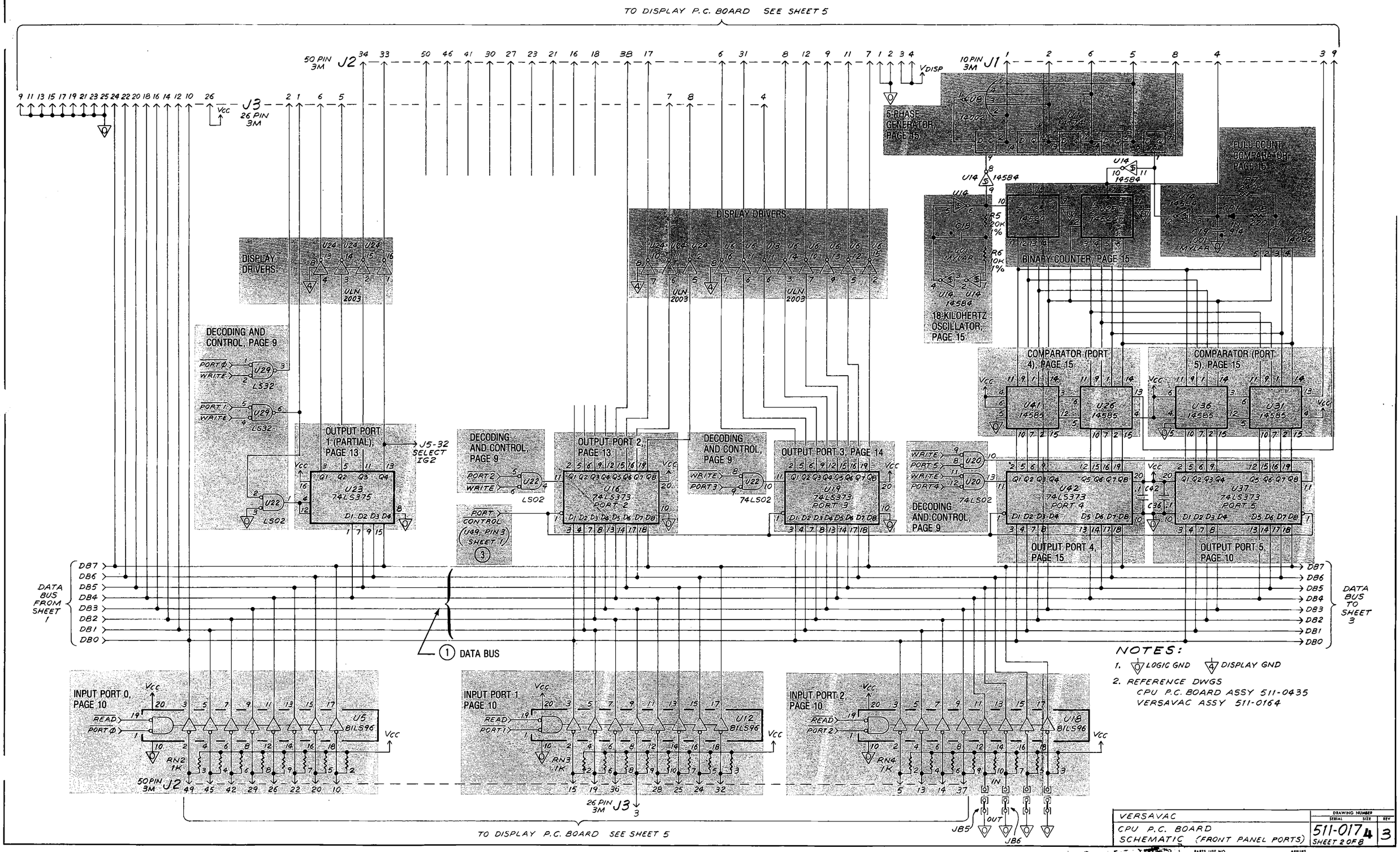

VERSAVAC	DRAWING NUMBER SERIAL SIZE	REV
CPU P.C. BOARD SCHEMATIC (FRONT PANEL PORTS)	511-0174 SHEET 2 OF 8	3

PARTS LIST NO. APPLIES

Figure 4.2 Circuit functions

NOTES: Page references relate to figure 4.1. For revised drawing 511-0174, see section 7.

DESCRIPTION	ITEM	PART NO.	SUB ASSY	QT

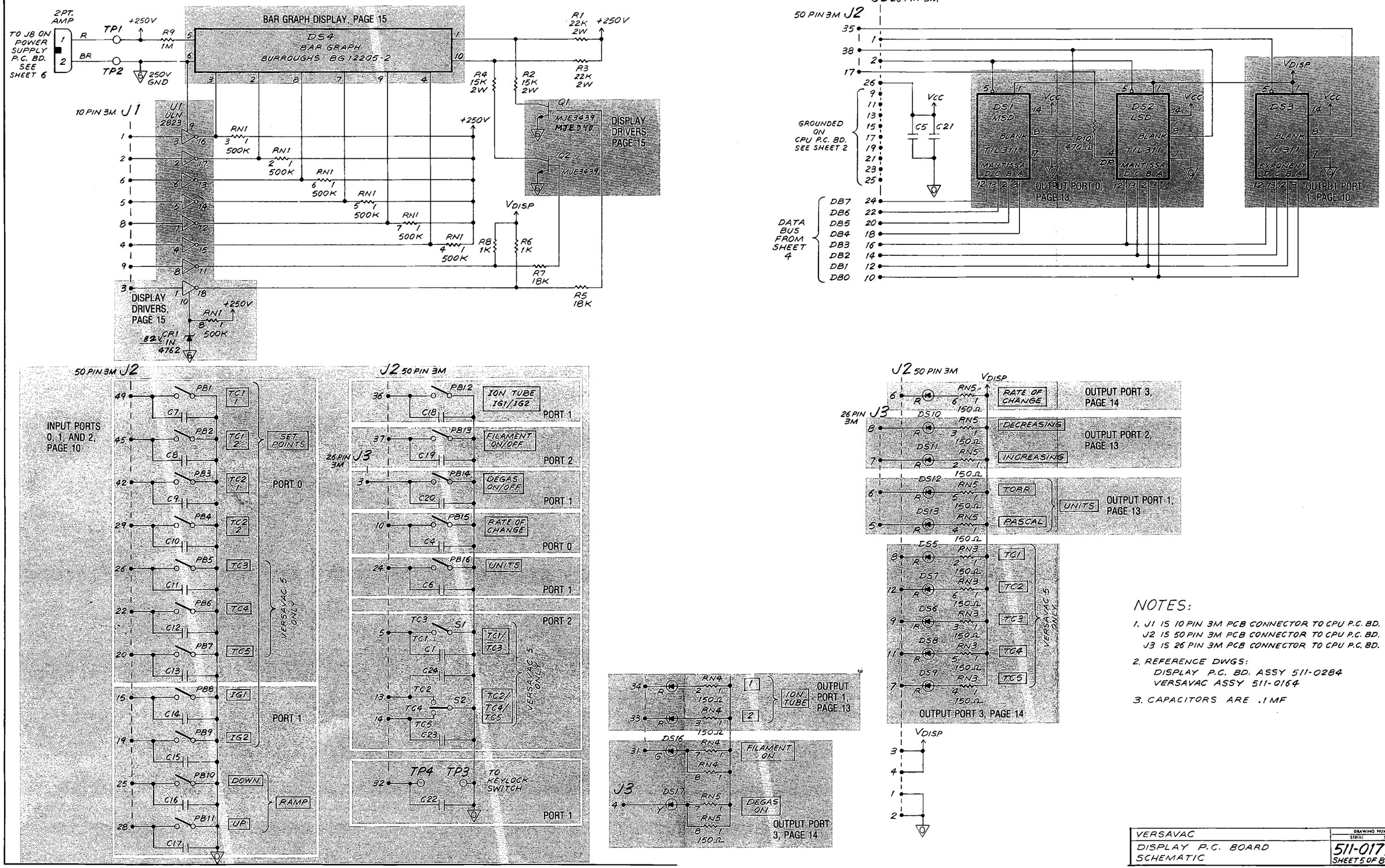

NOTES:

1. J1 IS 10 PIN 3M PCB CONNECTOR TO CPU P.C. BD.
   J2 IS 50 PIN 3M PCB CONNECTOR TO CPU P.C. BD.
   J3 IS 26 PIN 3M PCB CONNECTOR TO CPU P.C. BD.
2. REFERENCE DWGS:
   DISPLAY P.C. BD. ASSY 511-0284
   VERSAVAC ASSY 511-0164
3. CAPACITORS ARE .1MF

	DRAWING NUMBER SERIAL	SIZE	REV
VERSAVAC DISPLAY P.C. BOARD SCHEMATIC	511-0174 SHEET 5 OF 8		3

PARTS LIST NO. APPLIES

Figure 4.2 Circuit functions

NOTES: Circuits identified on this page appear in figure 4.1, page 8. For revised drawing 511-0174, see section 7.

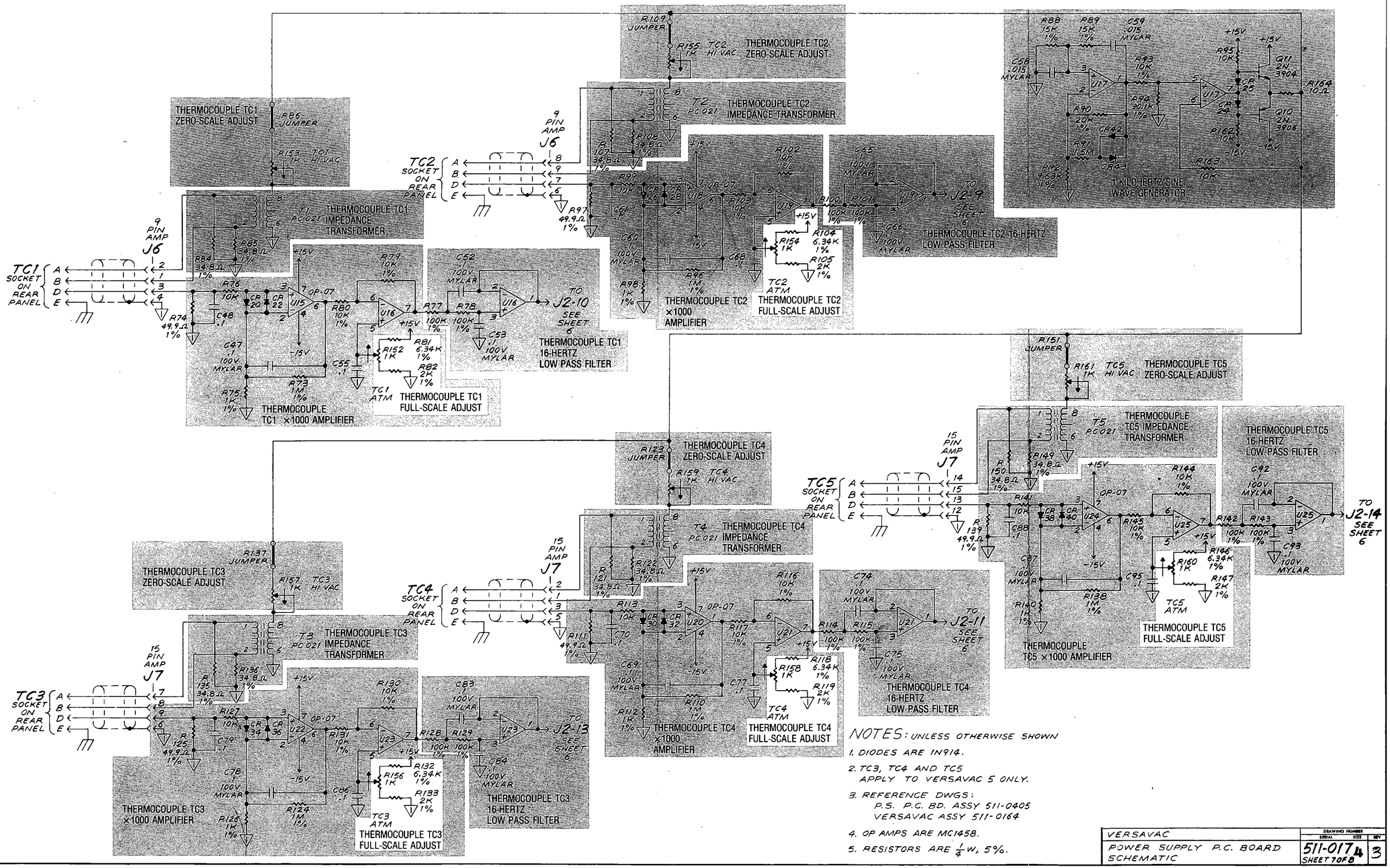

NOTES: UNLESS OTHERWISE SHOWN

1. DIODES ARE 1N914.
2. TC3, TC4 AND TC5 APPLY TO VERSAVAC 5 ONLY.
3. REFERENCE DWGS: P.S. P.C. BD. ASSY 511-0405 VERSAVAC ASSY 511-0164
4. OP AMPS ARE MC1458.
5. RESISTORS ARE $\frac{1}{4}$W, 5%.

DESCRIPTION	ITEM	PART NO.	SUB ASSY	QTY.

VERSAVAC	DRAWING NUMBER		
POWER SUPPLY P.C. BOARD SCHEMATIC	511-0174 SHEET 7 OF 8		3

PARTS LIST NO. APPLIES

Figure 4.2 Circuit functions

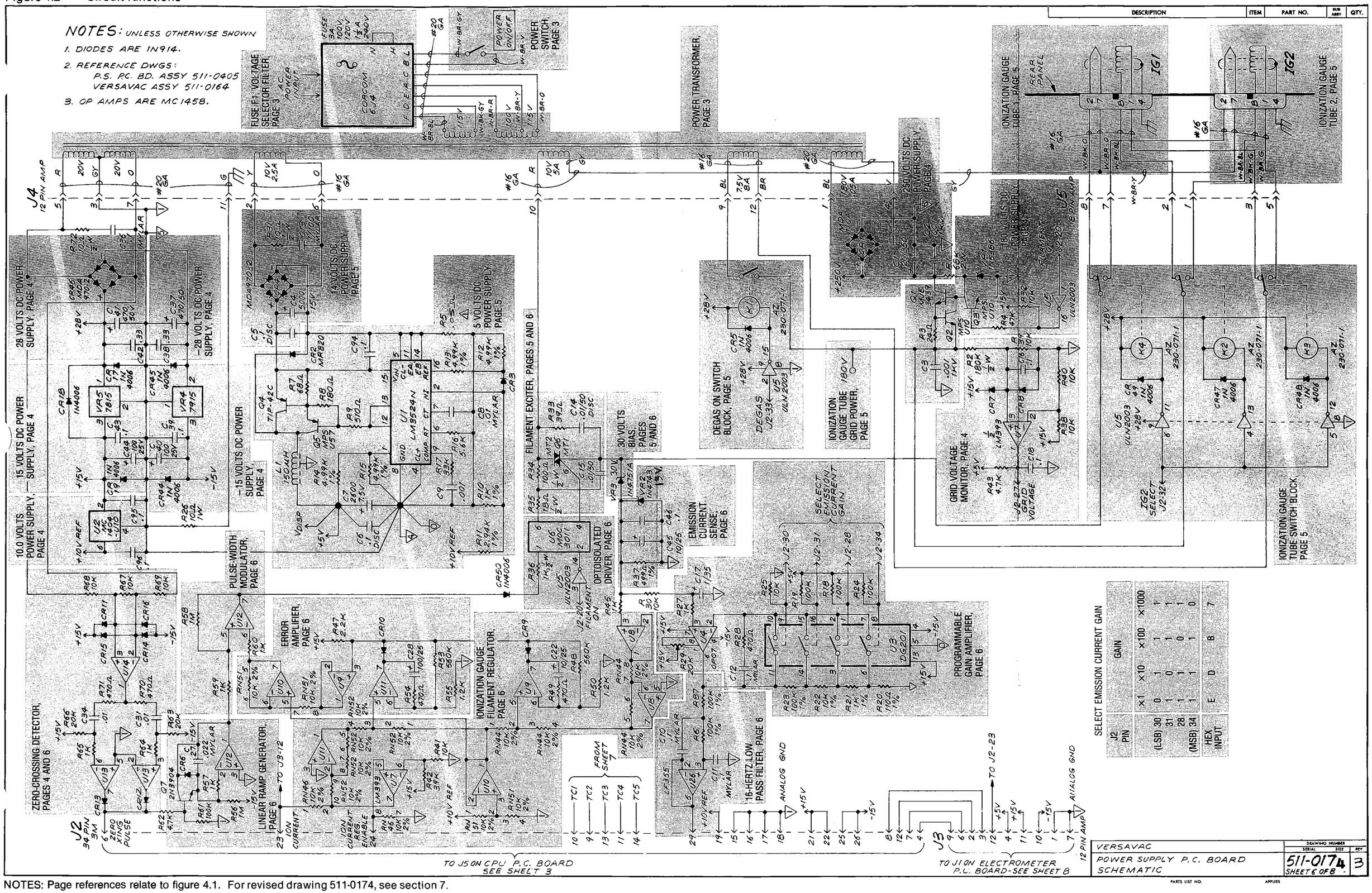

NOTES: Page references relate to figure 4.1. For revised drawing 511-0174, see section 7.

Figure 4.2 Circuit functions

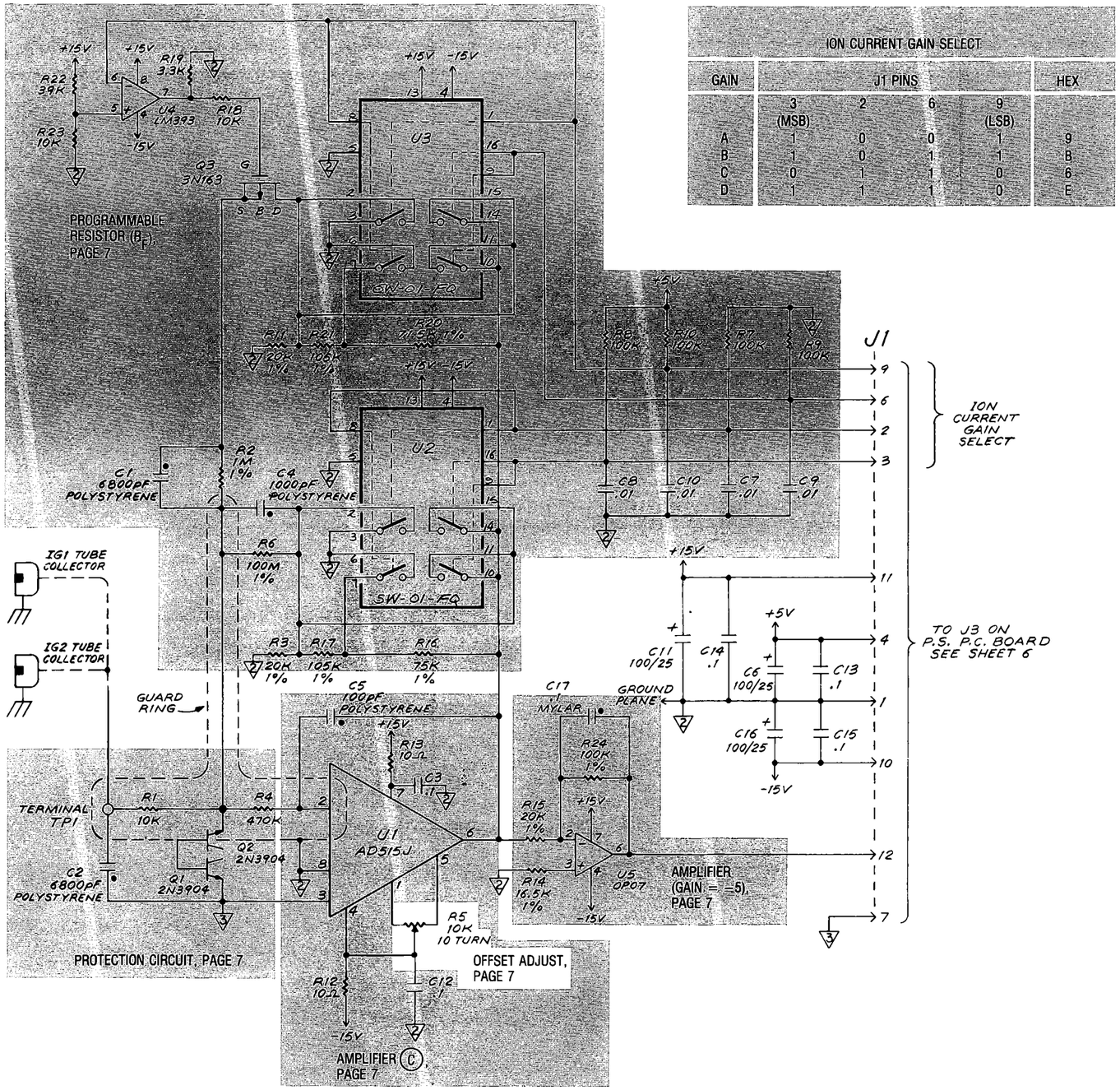

GAIN	J1 PINS 3 (MSB)	2	6	9 (LSB)	HEX
A	1	0	0	1	9
B	1	0	1	1	B
C	0	1	1	0	6
D	1	1	1	0	E

NOTES: Page references relate to figure 4.1.
For revised drawing 511-0174, see section 7.

ELECTROMETER P.C. BOARD

NOTES:
1. REFERENCE DWGS:
ELECTROMETER P.C. BD. ASSY 511-0313
VERSAVAC ASSY 511-0164

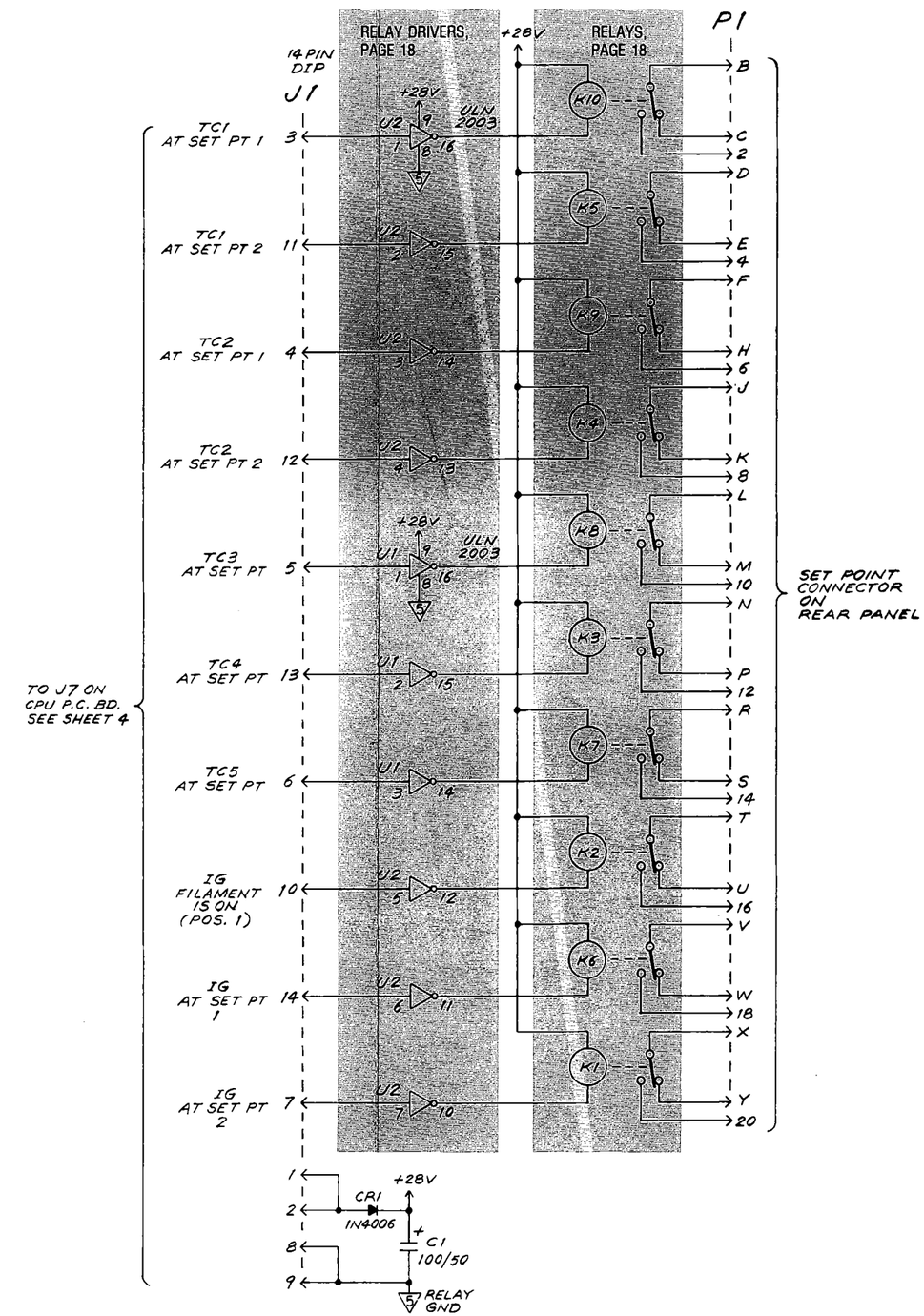

RELAY P.C. BOARD

NOTES:
1. REFERENCE DWGS:
RELAY P.C. BD. ASSY 511-0343
VERSAVAC ASSY 511-0164

DESCRIPTION	ITEM	PART NO.	SUB ASSY	QTY.

VERSAVAC	DRAWING NUMBER SERIAL SIZE	REV
ELECTROMETER P.C. BOARD AND RELAY P.C. BOARD SCHEMATICS	511-0174 SHEET 8 OF 8	3

PARTS LIST NO. APPLIES

SECTION 5

THERMOCOUPLE AND IONIZATION GAUGE TUBES

OPERATING PRINCIPLES

5.1 THERMOCOUPLE GAUGE TUBES

5.1.1 Operating Principles

The type of thermocouple gauge tube (Hastings-Raydist, Model DV-6M) used with the VersaVac gauge encloses a chamber that is kept at the same pressure as the vacuum system (figures 5.1 and 5.2). Inside the chamber are a heater wire and a thermocouple, arranged so that the center of the heater wire forms part of the thermocouple junction.

When 1-kilohertz ac sine-wave power is applied, the heater temperature rises by I^2R resistance heating (figure 5.2). The temperature attains equilibrium when the input power equals the heat escaping from the heater. The thermocouple measures the equilibrium temperature and sends an amplified signal to the VersaVac gauge central processing unit (CPU).

Thermal energy escapes the heater wire (with the thermocouple junction at the midpoint), primarily because of the thermal conductivity of the gas between the heater wire and the case of the tube. The thermal conductivity is proportional to the pressure of the gas, so the higher the pressure, the higher the thermal conductivity between the heater and the case. At higher pressures, therefore, the heater is at a lower temperature, because in those circumstances heat is more readily conducted through the gas to the case than at lower pressures. Thus, the amplified thermocouple signal provides an output voltage that is inversely proportional (approximately) to the pressure inside the thermocouple gauge tube.

Figure 5.1 Thermocouple gauge tube (Hastings-Raydist, Model DV-6M)

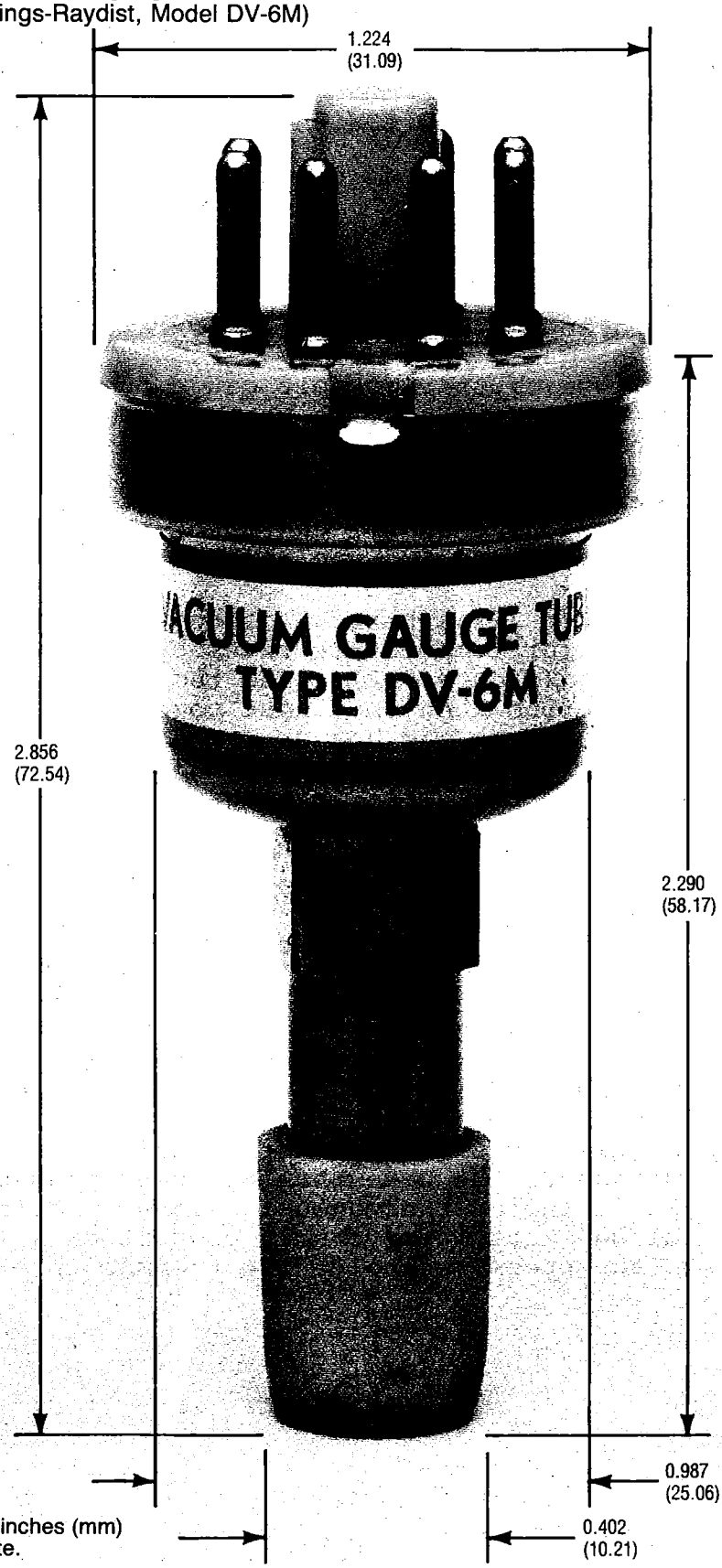

NOTE: Dimensions in inches (mm) are approximate.

Figure 5.2 Thermocouple gauge tube operation

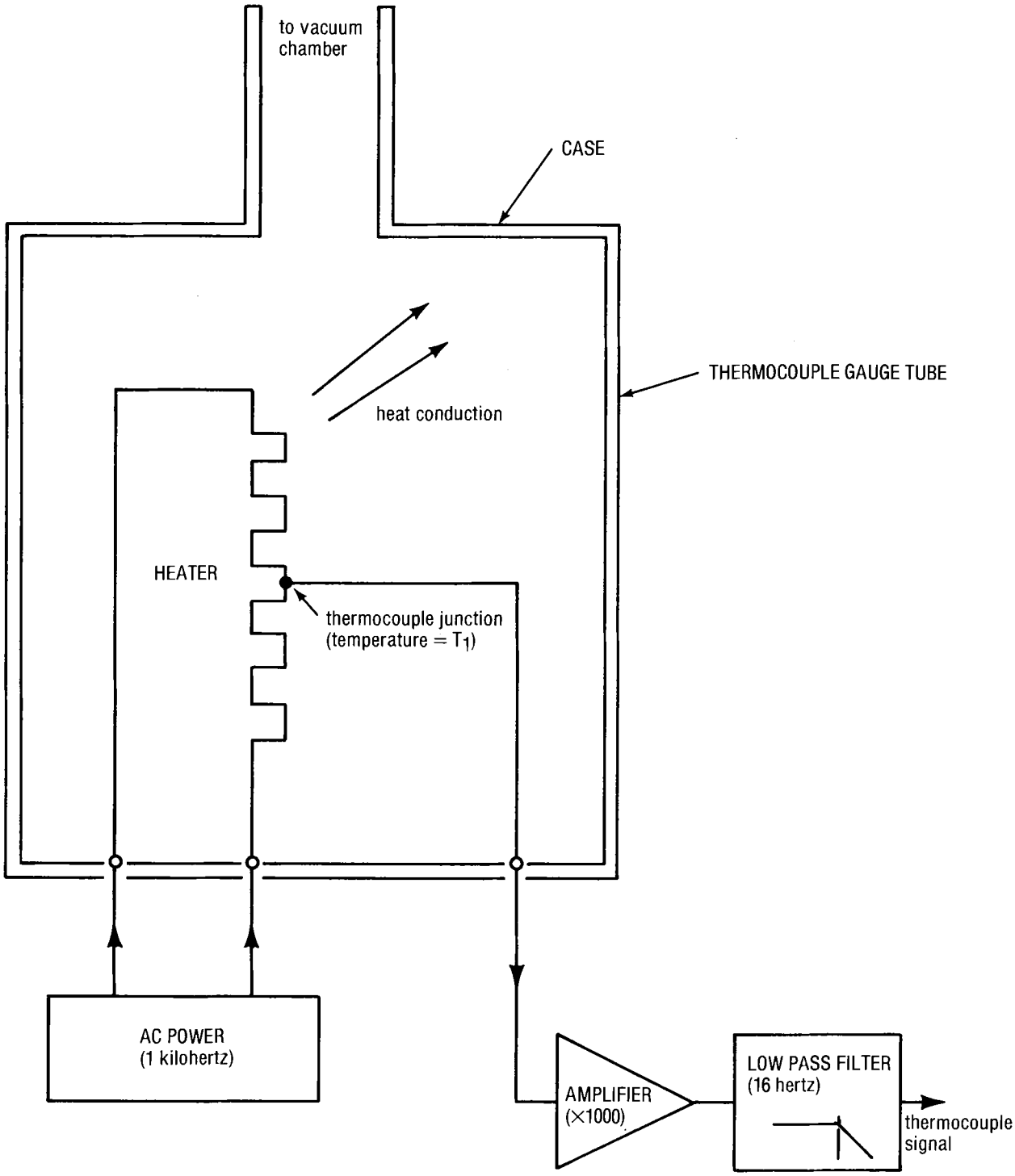

$T_1 - T_0 = (P_D) \bullet (R_\Theta)$ α thermocouple junction temperature, where

heater temperature = T_1
case temperature = T_0
thermal resistance of gas between heater and case = R_Θ
dissipated power (from heater) = P_D

5.1.1 (continued)

NOTE
Thermocouple tubes must be mounted in a vacuum system base upward, in a way that protects them from contaminants, which can change their internal thermal characteristics, and thus their readings.

Because the thermocouple measures a temperature difference ($T_1 - T_0$, where T_1 = heater temperature and T_0 = case temperature) rather than an absolute temperature, the temperature of the case must remain relatively constant in order to minimize error in the tube calibration (figure 5.3).

Typical (approximate) operating conditions (P_D = power dissipation):

$T_1 - T_0$ at atmosphere = 5 to 10 degrees C

$T_1 - T_0$ at high vacuum = 300 degrees C

P_D = heater power of approximately 8 milliwatts

5.2 IONIZATION GAUGE TUBES

5.2.1 Operating Principles

VersaVac gauges accept two Bayard-Alpert types of inverted ionization gauge tubes: Model 924 (standard range; drawing 605-1182) and Model 922 (broad range; drawing 605-1172).

These ionization gauge tubes operate similarly. They differ mainly in their internal geometry, with the smaller Model 922 tube operating at higher pressures. The tubes have 4 major elements (figure 5.4):

a) hot filament, which emits electrons,

b) grid, which collects electrons,

Figure 5.3 Thermocouple gauge heat flow

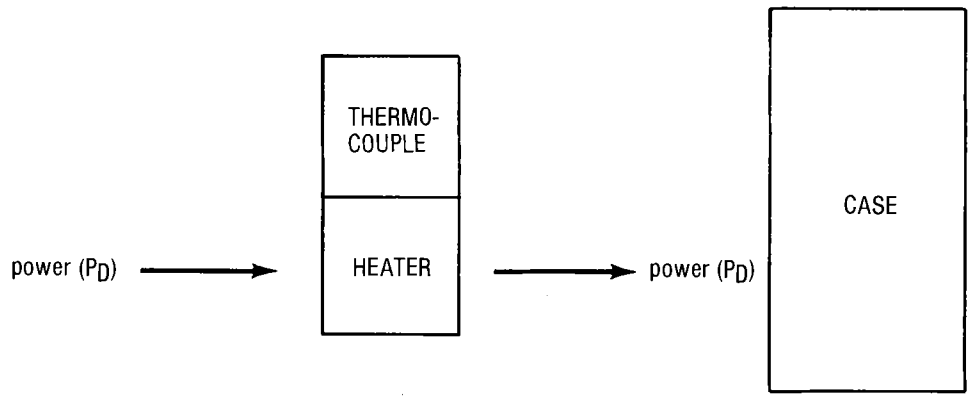

Dissipated power (P_D) flows through thermal resistance (R_Θ);
$\therefore$ temperature difference $(T_1 - T_0) = P_D \bullet R_\Theta$.

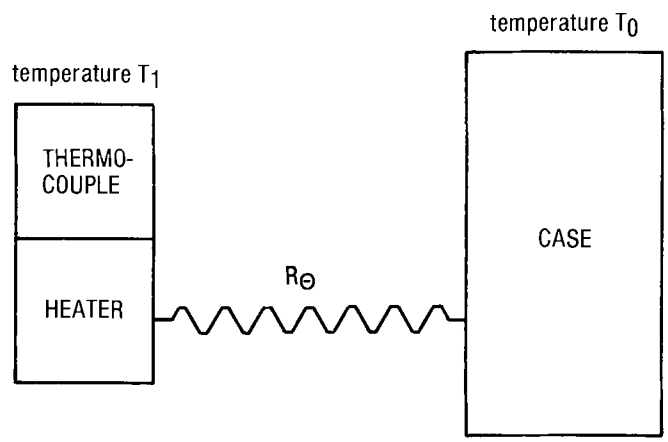

NOTES: Thermal resistance (R_Θ) = (thermal conductivity)$^{-1}$.
P_D (set by zero-scale adjust) is constant;
R_Θ varies with pressure in tube.

Figure 5.4 Model 924 ionization gauge tube, top view

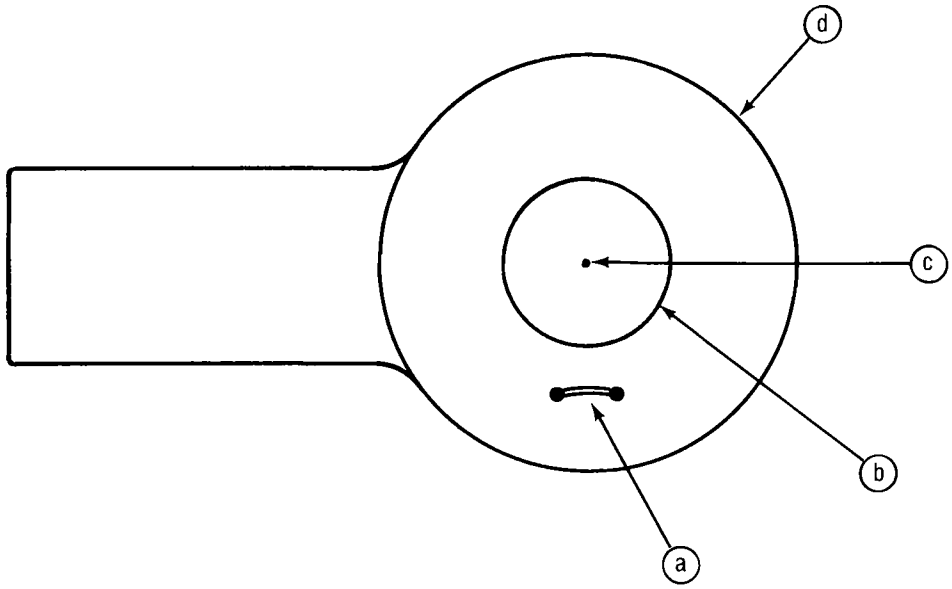

KEY

a. Filament (electron emitter) at 30 volts dc
b. Grid (electron collector) at 180 volts dc
c. Positive ion collector at virtual ground
d. Screen (platinum inner coating) at ground potential

5.2.1 (continued)

c) collector, which collects positive ions, and

d) screen, a thin platinum coating on the inside glass wall.

The hot filament emits electrons that accelerate toward the grid (figure 5.5). The grid is at a potential of 150 volts dc above the potential of the filament, which is 30 volts dc above ground potential. Typically, the electrons make several passes through the grid structure before being collected by the grid. They collide with gas molecules inside the grid structure, producing an additional electron and a positive ion upon impact. The positive ion is what remains of a gas molecule after a collision has removed one of its electrons. The positive ions produced inside the grid structure are repelled by the 180 volts of the grid and are attracted to the collector wire (at virtual ground) that is suspended in the center of the grid structure. The positive ions being collected (the ion current, i+) are measured by the electrometer. The electrons that are emitted by the filament form the emission current (i-).

The electrons are more likely to make ionizing collisions at high pressures than at low pressures because more gas molecules are present per unit volume at high pressures. Therefore, the VersaVac gauge CPU determines ionization gauge pressures by measuring the ion-current:emission-current ratio, using the following formula.

$$P = \frac{1}{S}\left(\frac{i+}{i-}\right),$$

where i+ = positive ion current (amperes)

i- = emission current (amperes)

P = pressure inside the grid structure (torr)

S = tube sensitivity $(\text{torr})^{-1}$.

Figure 5.5 Ionization gauge tube operation

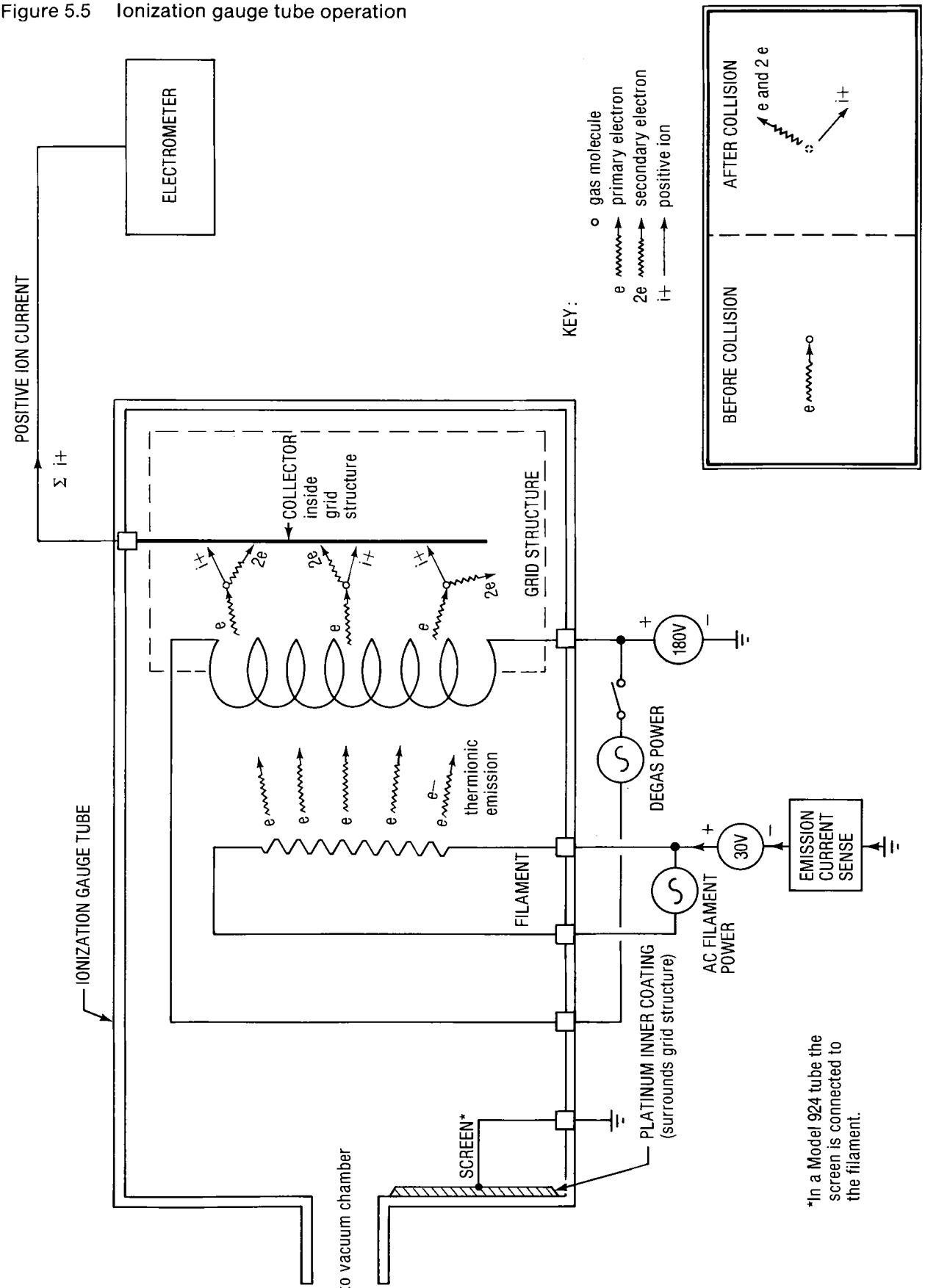

5.2.1 (continued)

The sensitivity (S) of an ionization gauge tube varies with gas species, electron emission level, actual pressure within the tube, and the operating voltages of the 4 major internal elements of the tube. The sensitivity factor normally is stated in terms of nitrogen gas at relatively low pressure. For the Model 922 ionization gauge tube, sensitivity (nitrogen) is 10 $torr^{-1}$. For the Model 924 ionization gauge tube, sensitivity (nitrogen) is 11 $torr^{-1}$. In a VersaVac gauge sensitivity can be programmed in a range between 5 $torr^{-1}$ and 20 $torr^{-1}$, to accommodate calibration for gas species other than nitrogen.

The VersaVac gauges control the emission level of electrons from the filament by controlling filament temperature (thermionic emission). The greater the current through the filament, the greater the filament temperature and the more electrons are emitted. At low pressures, the VersaVac gauge control circuit maintains emission current at 10 milliamperes. At high pressures, it controls filament temperature to produce a positive ion current of 1 microampere (figure 4.3).

CAUTION

In order for an ionization gauge tube to operate with accuracy, it must be degassed thoroughly after each exposure to atmosphere, as well as periodically, and it must be mounted and shielded to keep it free of contaminants as described below.

The lowest pressures a Bayard-Alpert-type ionization gauge tube usually measures are in the low 10^{-10} torr (10^{-8} pascal)* range, because of the X-ray limit. This limit occurs at pressures below the lowest range (10^{-9} torr) measured by the VersaVac gauges. The X-ray limit is the phenomenon in which measured positive ion current becomes

* Throughout, pressure equivalents are approximate.

5.2.1 (continued)

independent of pressure in the 10^{-10} torr (10^{-8} pascal) region. In this situation photoelectrons on the surface of the collector inside the tube are ejected by soft X rays' striking the collector. (The X rays are produced when the 150-volt electrons strike the grid structure.) This action causes a residual current to flow in the collector, which is indistinguishable by the electrometer from positive ion current.

5.2.2 Behavior at "High" Pressure

At pressures above approximately 10 microns (10^{-2} torr/1.33 pascal) ionization gauge tubes do not behave in a linear fashion. They first exhibit an increase in sensitivity (S) and then, as pressures increase above 75 to 100 microns, sensitivity starts to drop. Sensitivity has been seen to drop so rapidly, for example, that at pressures between 1 and 10 torr (with emission current still present in the ionization gauge tube), the positive ion current has dropped to a point where, to the CPU (and therefore the front-panel display), the tube seems to be operating under high vacuum. In fact, as pressure increases from 100 microns (10^{-1} torr/13.3 pascal), the calculated (apparent) ionization gauge tube pressure increases, levels off, and then decreases. The apparent ionization gauge pressure drops into the 10^{-5} or 10^{-6} torr (10^{-3} or 10^{-4} pascal) region before the filament fails to maintain emission current.

The actual pressure at which the apparent ionization gauge pressure levels off has been seen to be as low as 50 microns. Then, subsequent degassing of the tube in the 10^{-6} torr (10^{-4} pascal) range raised the leveling-off pressure from 50 microns to above 100 microns.

This deviation from linearity (represented in figure 5.6) is related to the fact that at relatively high pressures the mean free paths for electrons and ions become comparable to the gauge tube dimensions. That is, at pressures of 1×10^{-6} torr (1.33×10^{-4} pascal) of nitrogen gas, the mean free path for electrons is on the order of 900 meters, whereas at 1×10^{-1} torr (100 microns/13.3 pascal) the mean free path is on the order of 9 millimeters--in other words, approximately the internal dimensions of the ionization gauge tube elements.

Figure 5.6 Typical ionization gauge tube behavior at 'high' pressures (torr)

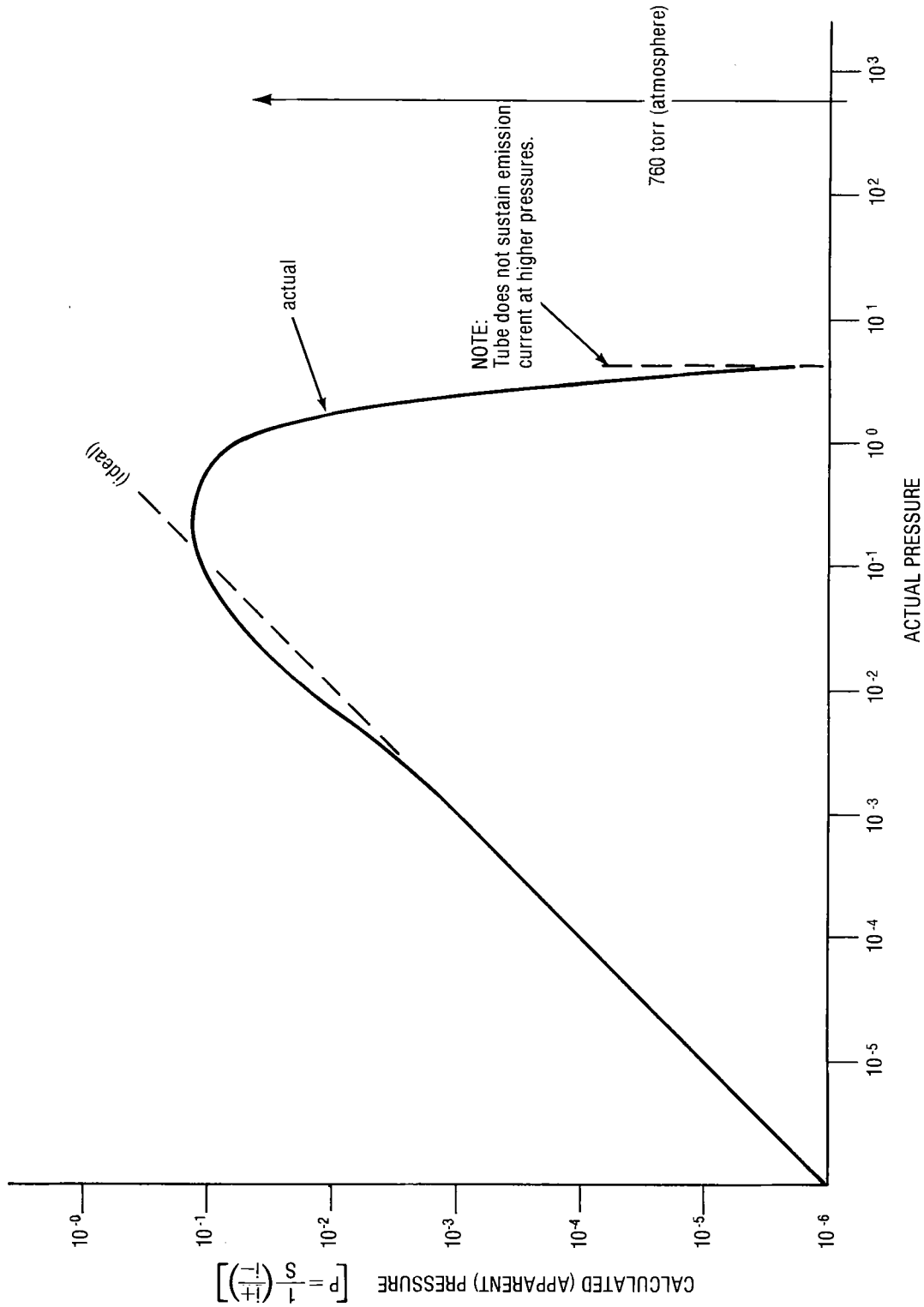

5.2.2 (continued)

CAUTION

As the graph in figure 5.6 shows, there is often 1 ionization gauge pressure reading for 2 different actual pressures. For this reason, we recommend strongly that in installing a VersaVac gauge, users qualify all ionization gauge set points and outputs by associating each with a thermocouple gauge set point. In fact, the ionization gauge filament could be interlocked with an appropriate thermocouple set point.

We have observed the "high"-pressure behavior discussed above on several types of Bayard-Alpert gauge tubes, in both standard and high-pressure ranges, from a variety of manufacturers.

NOTE

The curves shown can be expected to vary with different gas species.

5.2.3 Mounting

For greatest accuracy mount ionization gauge tubes vertically and as close as possible to the sites being measured. Use mounting flanges at least 1-in. in diameter having conductance high enough to keep tube interiors as close to the same pressure as the vacuum system as possible.

CAUTION

In sputtering or other glow-discharge systems, shield the ports of the ionization gauge tubes, to prevent ions from entering the tubes and thereby making readings inaccurate. (Shields must be grounded.)

5.2.4 Degassing

Because the tubes used with the VersaVac gauge contain hot filaments, residual gases continuously outgas from glass and metal parts. To keep the gauge as free as possible from these and other contaminating vapors (such as diffusion pump fluids, mercury, and water vapor), tubes must be degassed regularly, as well as after every exposure to atmosphere.

Degassing should last until the degassing pressure has reached a peak and then dropped, to stabilize at a lower pressure. This usually can be achieved by allowing the tube to degas overnight if pressures below 10^{-8} torr (10^{-6} pascal) are to be measured. If pressures to be measured are in the 10^{-6} torr (10^{-4} pascal) range, 30 minutes is usually sufficient for degassing.

Unless newly installed tubes are degassed, gauge readings will be higher than actual system pressure for a long time. Degas a new gauge tube for 10 or 15 minutes if operating pressures are to be in the 10^{-6} torr (10^{-4} pascal) range. Extend the degas time for lower operating pressures to 30 minutes to an hour, for example, if operating pressures are to be less than 10^{-8} torr (10^{-6} pascal).

CAUTION

After degassing, the initial readsorbtion of gases can lower readings temporarily.

5.2.5 References

Alpert, D. "New Developments in the Production and Measurement of Ultra High Vacuum." Journal of Applied Physics, 24:7 (July 1953).

Dushman, S., and Lafferty, J.M. Scientific Foundations of Vacuum Technique. 2d ed. New York: Wiley, 1962.

Pittaway, L.G. "Electron Trajectories in Ionization Gauges." Journal of Applied Physics, 3:7 (July 1970).

5.2.5 (continued)

Schultz, G.J. "Characteristics of the Bayard-Alpert Ionization Gauge at Pressures Above 10^{-5} mm Hg." Journal of Applied Physics, 28:10 (October 1957).

Weston, G.F. "Measurement of Ultra-High Vacuum: Part 1, Total Pressure Measurements." Vacuum 29:8/9.

SECTION 6

DIAGNOSTIC MESSAGES, ADJUSTMENTS, AND CALIBRATIONS

6.1 DIAGNOSTIC MESSAGES

In case of an operating fault, the digital display on the front panel of the VersaVac gauge conveys a diagnostic message that locates the fault either within the VersaVac gauge circuitry or outside the unit. (An external fault might, for example, concern the ionization gauge hookup or the ionization gauge tube.)

The VersaVac gauge identifies two types of fault: (1) those that relate only to operation of the ionization gauge tubes and (2) those that relate to the operation of the entire VersaVac unit.

When a fault involves only an ionization gauge tube, the filament is switched off but the rest of the VersaVac gauge functions normally. The diagnostic message is cleared from the digital display as soon as the operator re-establishes the ionization gauge filament by pushing the front panel FILAMENT switch on. If a problem still exists, the diagnostic message will repeat.

When a detected fault could affect the entire operation of the VersaVac gauge, the diagnostic message appears on the digital display, and operation ceases. All rear panel set-point and data outputs are cleared. To remedy this condition, the operator must correct the fault and then switch the front panel POWER rocker switch off and then on again. If possible, the VersaVac gauge resumes operation.

On the digital display, diagnostic messages start with the letter E. Messages E0 through E7 indicate faults that affect the entire VersaVac unit. Messages E8 through EB indicate faults that affect the ionization gauge tube alone. The diagnostic messages are defined in table 6.1.

Table 6.1

DIAGNOSTIC MESSAGES

DIGITAL DISPLAY

Mantissa	Exponent	Diagnosis
E0	1	RAM fault (lower nibble U35) during power-up self-test or flag test
E0	2	RAM fault (upper nibble U40) during power-up self-test or flag test
E1	0	ROM fault (U44, U39, U34, U28) during power-up self-check
E2	0	A-D converter (U15) did not return "conversion complete" signal within 50 microseconds
E3	X	V_{ref} (10.0 volts) fault (X=LSB of V_{ref}) not within specification (9.95-10.05 volts)
E4	1	TC1 set point 1 retention fault (out of bounds)
E4	2	TC1 set point 2 retention fault (out of bounds)
E4	3	TC2 set point 1 retention fault (out of bounds)
E4	4	TC2 set point 2 retention fault (out of bounds)
E4	5	TC3 set point retention fault (out of bounds)
E4	6	TC4 set point retention fault (out of bounds)
E4	7	TC5 set point retention fault (out of bounds)
E4	8	IG1 set point 1 retention fault (out of bounds)
E4	9	IG1 set point 2 retention fault (out of bounds)
E4	A	IG2 set point 1 retention fault (out of bounds)
E4	B	IG2 set point 2 retention fault (out of bounds)

(continued)

Table 6.1 (continued)

DIGITAL DISPLAY

Mantissa	Exponent	Diagnosis
E8	0	tube grid voltage too low, indicating short-circuit, excess current draw, cable short-circuit, glow discharge within gauge tube, or power supply PC board fault
E9	0	electrometer out of range (at lowest gain) indicating PC board fault or operation of ionization gauge at "high" pressures (between 1 and 10 torr)
EA	0	emission current out of range (at lowest gain), indicating PC board fault or operation of ionization gauge at "high" pressures (between 1 and 10 torr)
EB	1	filament out of regulation and emission amplifier at gain 1, indicating PC board fault or operation of ionization gauge at "high" pressures (between 1 and 10 torr)
EB	2	filament out of regulation and electrometer at minimum gain, indicating PC board fault or operation of ionization gauge at "high" pressures (between 1 and 10 torr)

NOTE

To clear set point errors, switch power off, disconnect power cord, and remove bottom cover. Check the battery voltage; it should be 2.6 volts or greater. Remove the battery IN/OUT jumper; wait 5 minutes; reinstall the battery IN/OUT jumper. Replace the cover and connect power cable. Switch on the VersaVac gauge and re-enter set points. If the above procedure does not clear the error, then the CMOS RAMs are defective or a problem exists in the battery circuit.

6.2 ADJUSTMENTS AND CALIBRATIONS

DANGER

Because the VersaVac gauge contains high voltage, whenever you remove or attach the top or bottom cover of the unit, be sure to switch off the front-panel POWER rocker switch, and unplug the input power cable.

6.2.1 Electrometer Offset (photograph 5)

On the electrometer PC board use trimmer potentiometer R5 to adjust the offset voltage of amplifier U1, as follows.

a) Switch off the front-panel POWER rocker switch, and unplug the input power cable.

b) Remove the bottom cover from the unit.

c) Reconnect the input power cable, and switch the POWER rocker switch on.

d) U1 must be at maximum gain before you adjust R5. One way to accomplish this is to energize an ionization gauge tube that is in the 10^{-6} torr (10^{-4} pascal)* range or below, and remove the collector plug from the rear-panel BNC. The CPU then sets the maximum gain for U1. The display will read 0.0×10^{-9} torr (0.0×10^{-7} pascal).

e) Read the voltage on J1 pin 12 to ground, and adjust R5 so that the J1 pin 12 voltage is as close to zero as possible.

f) Switch off the front-panel POWER rocker switch, and unplug the input power cable.

g) Reattach the bottom cover on the unit.

---

*Pascal equivalents are approximate throughout.

6.2.2 Emission Amplifier Offset (photograph 3 or 4)

a) Switch off the front-panel POWER rocker switch, and unplug the input power cable.

b) Remove the top cover from the unit.

c) Reconnect the input power cable, and switch the POWER rocker switch on.

Emission programmable-gain amplifier U4 is located on the power supply PC board. The gain of U4 is set by the digital inputs to analog switch U3. Possible gains are 1, 10, 100, and 1000. The offset adjustment must be performed at a gain of 1000, which the CPU requests when the ionization gauge filament is off. Put a digital voltmeter between the output of U26 (pin 6) and analog ground.

d) Make sure the FILAMENT ON/OFF indicator is off.

e) Adjust trimmer potentiometer R29 for the minimum voltage (as close to zero as possible).

f) Switch off the front-panel POWER rocker switch, and unplug the input power cable.

g) Reattach the top cover on the unit.

6.2.3 Calibrating a Thermocouple Gauge Tube (photograph 3 or 4)

Thermocouple gauge tubes TC1 through TC5 must be calibrated when the VersaVac gauge is first installed in a vacuum system and whenever a new tube replaces a used tube. (These thermocouple gauge tubes must be at thermal equilibrium in order to give accurate readings.) To achieve this, make two interdependent adjustments on each thermocouple gauge circuit on the power supply PC board: a fullscale adjustment and a zero-scale adjustment.

NOTE

Since these adjustments are interdependent, repeat the procedure at least once, always ending with the zero-scale adjustment.

6.2.3 (continued)

a) Switch off the front-panel POWER rocker switch, and unplug the input power cable.

b) Remove the top cover from the unit.

c) Reconnect the input power cable, and switch the POWER rocker switch on.

d) Initially, adjust to center rotation both the zero-scale and the fullscale trimmer potentiometers (located on the power supply PC board) for all thermocouple circuits to be calibrated. These are 4-turn trimmer potentiometers without end stops; to obtain the center rotation, make 5 turns in one direction and then rotate 2 turns in reverse.

e) Adjust the fullscale trimmer potentiometer as follows.

1) Back-fill the vacuum chamber with nitrogen to a pressure of 1 torr (1000 microns/133 pascal). Use a capacitance manometer gauge (or equivalent) to determine this pressure.

2) Adjust the fullscale trimmer potentiometer for the thermocouple being calibrated so that the front panel bar graph reading for that thermocouple indicates exactly 1000 microns.

f) When pressure in the vacuum chamber being measured is exactly 1 micron (0.133 pascal), adjust the zero-scale trimmer potentiometer so that exactly 1 segment illuminates on the related bar graph.

Repeat for each thermocouple to be calibrated.

g) Switch off the front-panel POWER rocker switch, and unplug the input power cable.

h) Reattach the top cover on the unit.

6.2.4 Ionization Gauge Tube Type Adjustment (figure 6.1a)

DANGER

Before making this adjustment, switch off the front panel POWER rocker switch, and unplug the input power cable. Then remove the bottom cover from the unit.

Ionization gauge tube 1 and tube 2 can be either Model 922 or Model 924 tubes. The position of the jumper on jumper block JB3 of the CPU PC board sets the circuitry for tube 1, and the position of the jumper on jumper block JB4 sets the circuitry for tube 2, as indicated in figure 6.1a.

6.2.5 Retaining Set Point Values: Battery In/Out Jumper (figure 6.1b)

DANGER

Before making this adjustment, switch off the front panel POWER rocker switch, and unplug the input power cable. Then remove the bottom cover from the unit.

In order for the VersaVac gauge to retain set point values, the NiCd battery (B1) must be charged to more than 2.2 volts dc, and the battery jumper (jumper block JB1 of the CPU PC board) must be at the "in" position (figure 6.1b).

For long-term storage of the VersaVac gauge (more than 4 weeks), set the battery jumper at the "out" position to prevent the battery from discharging.

6.2.6 50/60 Hertz Jumper (figure 6.1c)

DANGER

Before making this adjustment, switch off the front panel POWER rocker switch, and unplug the input power cable. Then remove the bottom cover from the unit.

Figure 6.1 Central processing unit PC board adjustments

a.. IG1/IG2 jumper

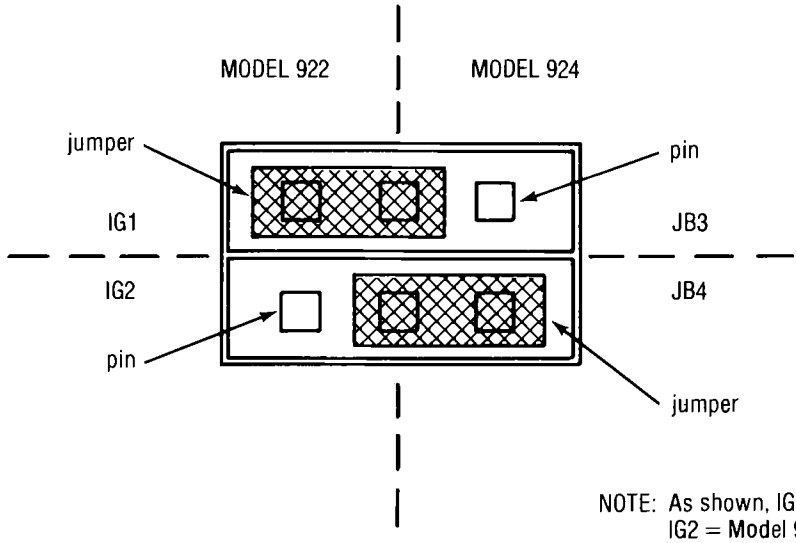

NOTE: As shown, IG1 = Model 922 and IG2 = Model 924.

b. Battery in/out jumper

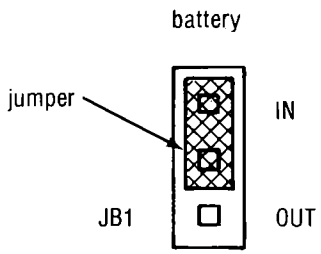

NOTE: To retain set points, put jumper at IN (as shown).

c. 50/60 hertz jumper

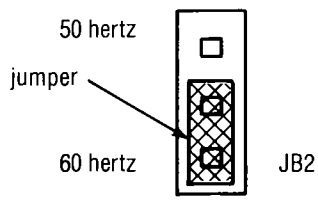

NOTE: As shown, 60 hertz is selected.

d. JB6—PASCAL/MILLIBAR display control

Factory set; do not change.

OUT = PASCAL
IN = MILLIBAR

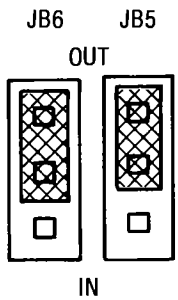

JB5—OUT = standard filament control
IN = optional filament control
(See section 3.1.1.8b.)

Ref: photograph 5

6.2.6 (continued)

The position of the 50/60-hertz jumper on jumper block JB2 of the CPU PC board determines the clock period for calculations of ionization gauge rate of change. The jumper should be set in the appropriate position for the input power (figure 6.1c).

6.2.7 Adjusting the Ionization Gauge Tube Sensitivity

NOTE

The VersaVac gauge CPU includes the sensitivity factor in the equation by which it computes ionization gauge pressures (section 5.2.1).

At initial power-up, the sensitivity factor is set at a value of 11 $torr^{-1}$ for a Model 924 tube and 10 $torr^{-1}$ for a Model 922 tube. (These are the correct values for the 2 types of tube, operating in nitrogen gas.)

The VersaVac gauge memory accommodates 4 independently programmed sensitivity factors (S), since either ionization gauge tube 1 or tube 2 can be a Model 924 or a Model 922 tube:

S1A: IG tube 1, type 924
S1B: IG tube 1, type 922
S2A: IG tube 2, type 924
S2B: IG tube 2, type 922

To adjust the sensitivity factor (in a range from 5 $torr^{-1}$ to 20 $torr^{-1}$) for the ionization gauge tube selected by the ION TUBE 1/2 switch, the operator sets the keylock switch at PROGRAM and holds both SET POINTS IG 1 and 2 switches in while pushing the RAMP DOWN/UP switch until the mantissa displays the required value.

CAUTION

The IG1/IG2 jumper, located on the CPU PC board, must be adjusted for the tube type, as described in section 6, or the readings will be in error.

6.2.7.1 Gas sensitivity settings (figure 6.2). Figure 6.2 indicates the sensitivity settings used to compensate for different gases within range of the sensitivity control.

NOTE

Since sensitivity can be set only in whole numbers, use the nearest whole number.

For example, on the 922 tube for argon, use 12; for carbon monoxide, use 11. Another method is to leave the sensitivity at its normal setting and compensate for differences using the gas sensitivity table published by Robert L. Sommers of Lewis Research Center.* To convert the readings on the digital readout of the VersaVac gauge (when calibrated for N_2), simply divide the reading by the number listed after the gas species. Some common gases listed are:

Gas	Number
O_2, N_2, Air	1.0
Ammonia	1.3
CO_2	1.4
Carbon tetrachloride	6.2
Methane	1.5
H_2	.43
Krypton	1.8
Neon	.30
Acetylene	2.0
Xenon	2.5
Argon	1.2
CO	1.1
Ethanol	3.6
Helium	.14

* NASA Technical Note TND-5385, NASA, Washington, D.C., June 1969

Figure 6.2 Gas Sensitivity Graph

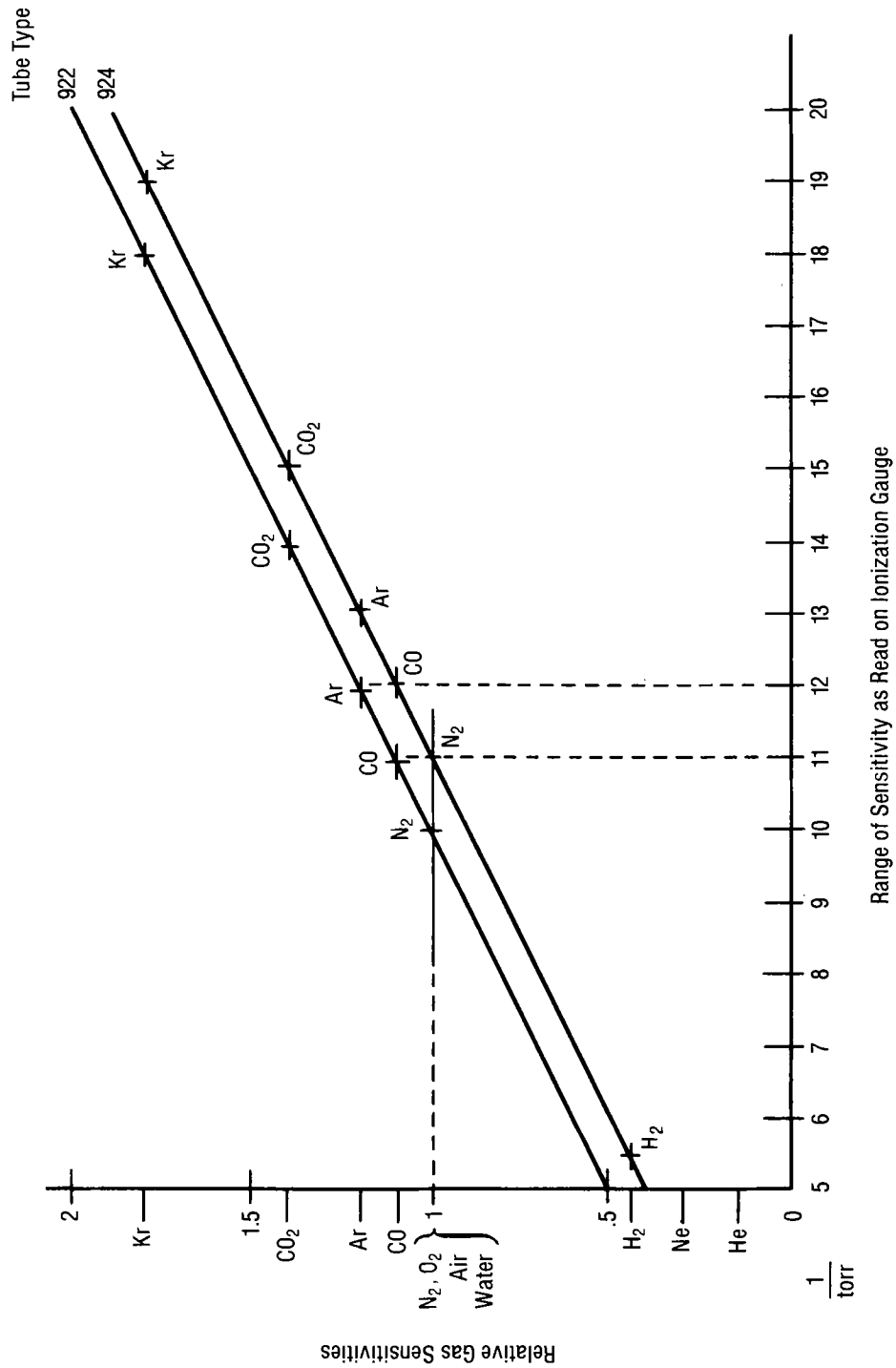

SECTION 7

PHOTOGRAPHS
DRAWINGS
PARTS LISTS

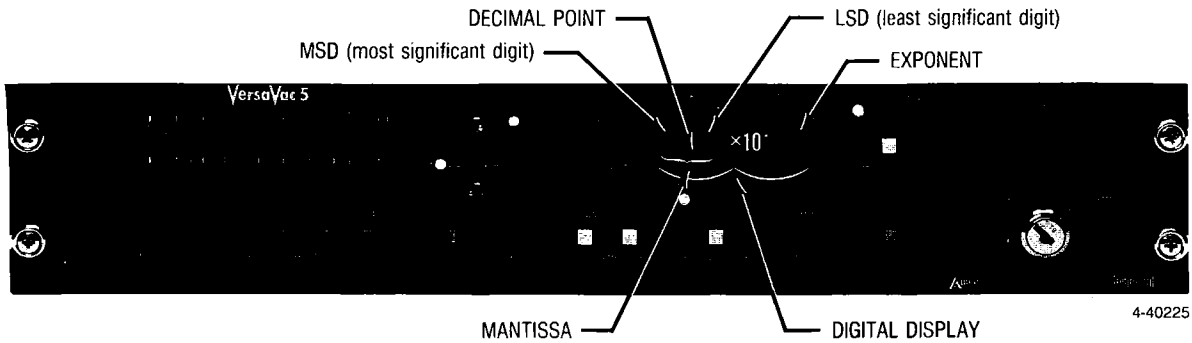

Photograph 1 VersaVac 5 gauge, front panel

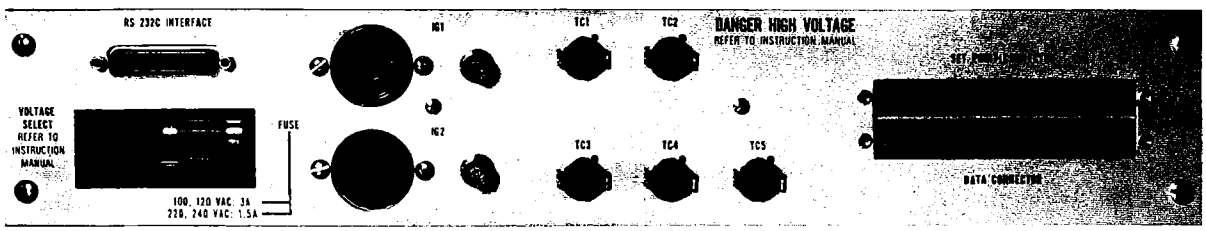

Photograph 1a VersaVac 5 gauge, rear panel, with RS232C connector

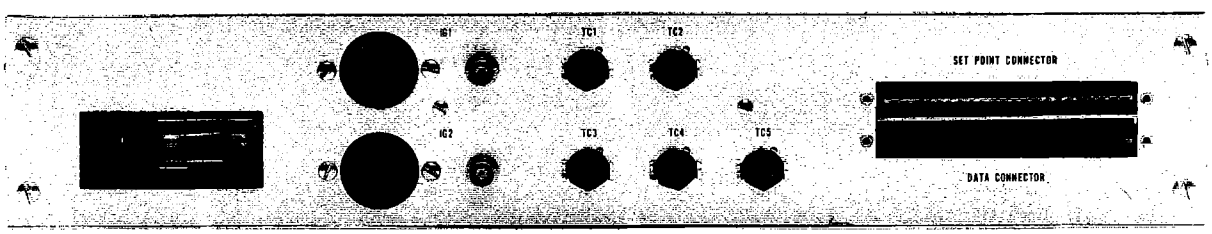

Photograph 2 VersaVac 5 gauge, rear panel

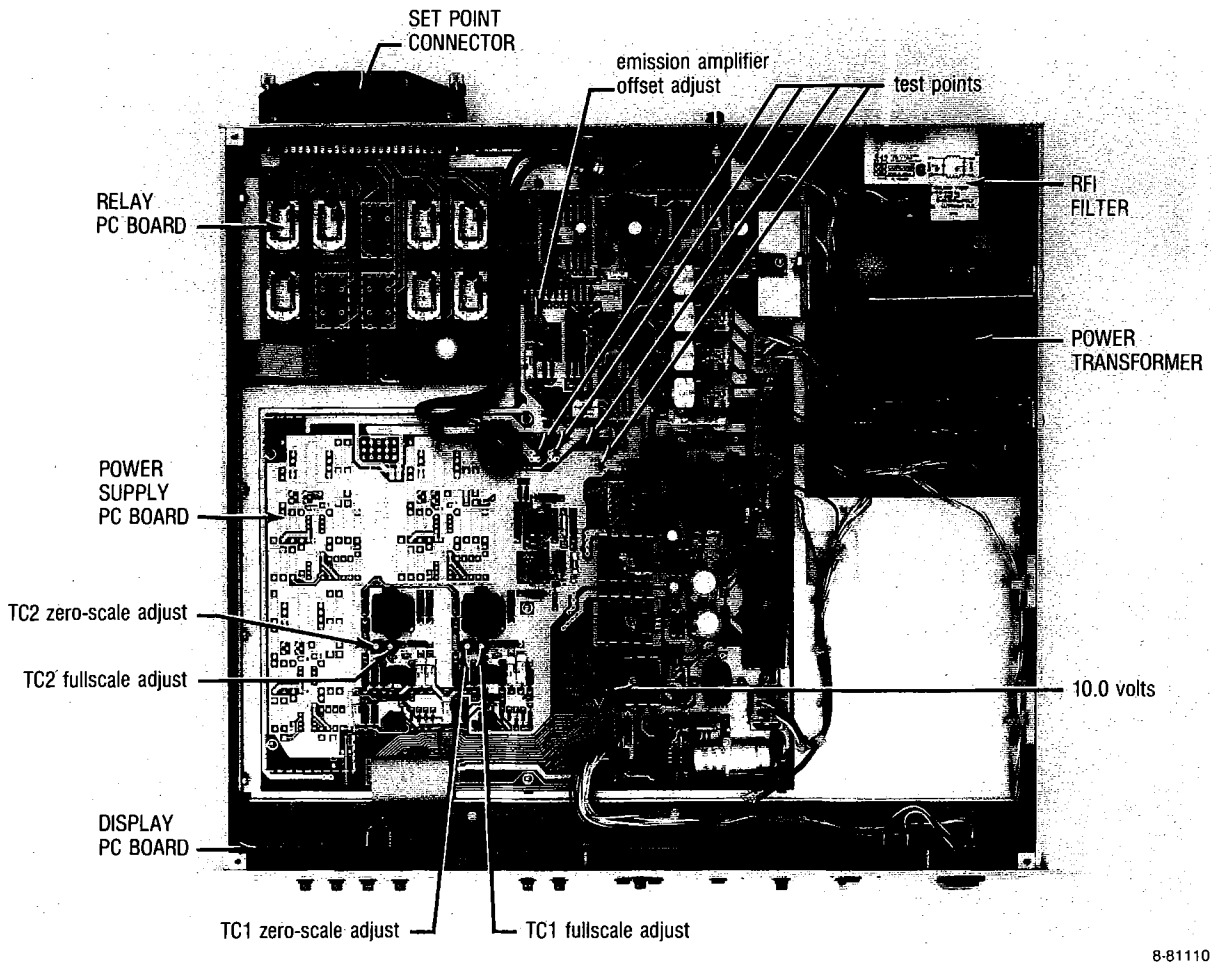

Photograph 3 VersaVac 2 gauge, top cover off

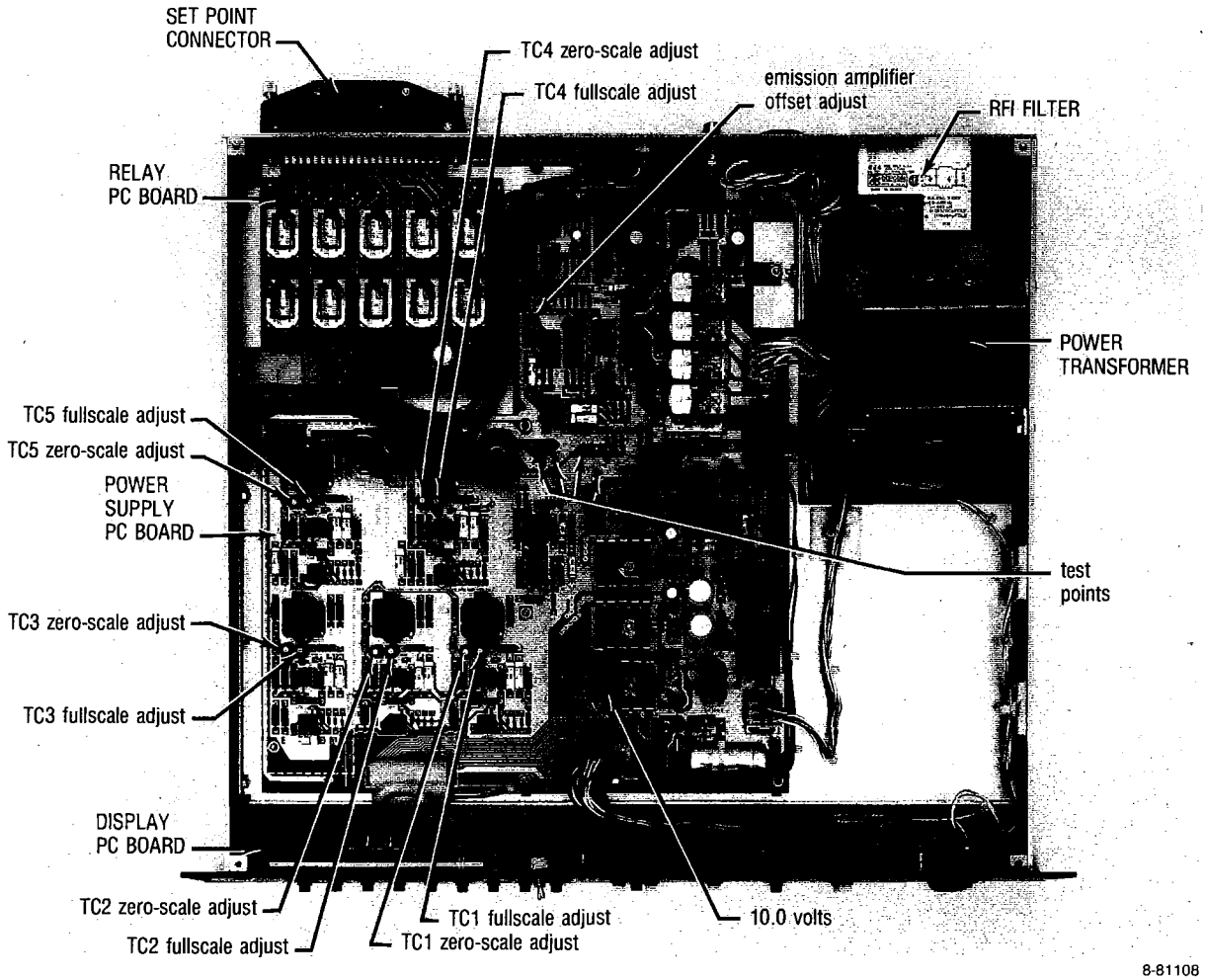

Photograph 4 VersaVac 5 gauge, top cover off

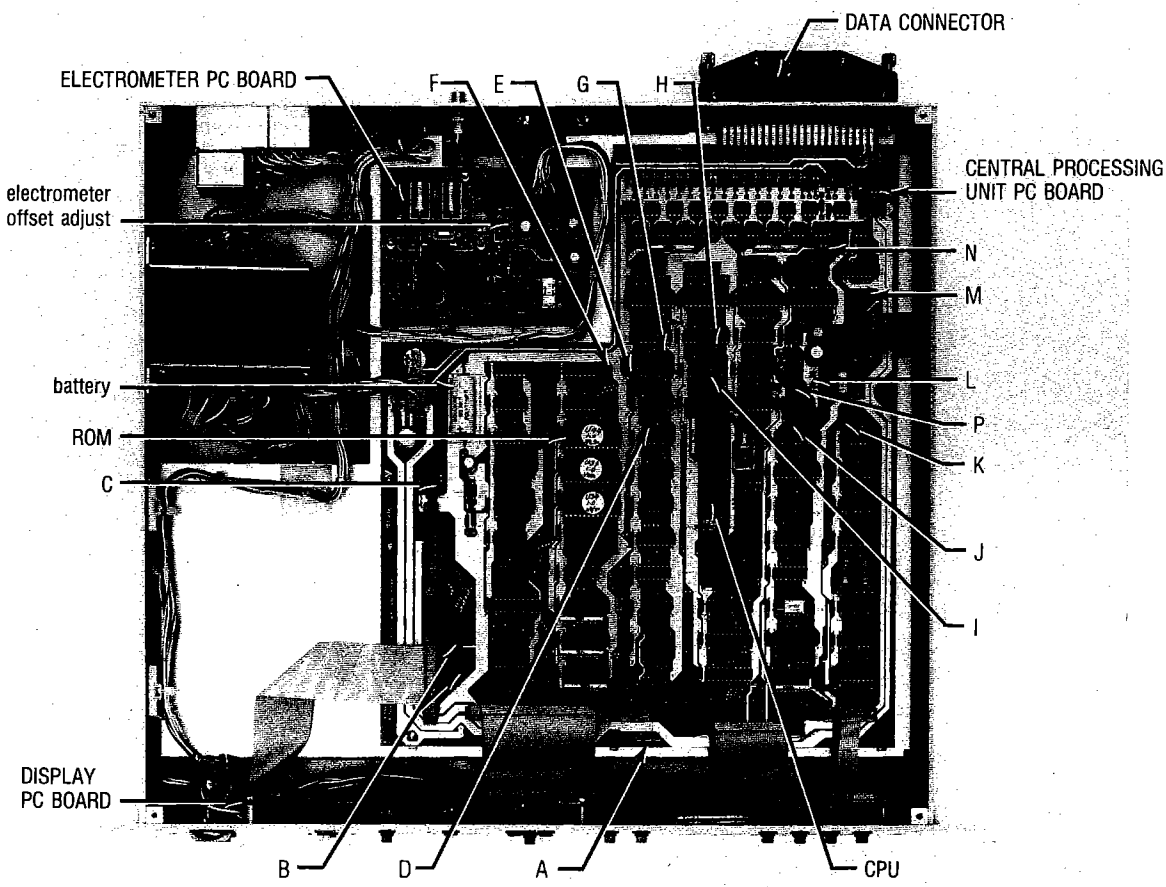

8-81109

Photograph 5 VersaVac 2 and 5 gauge, bottom cover off

KEY:

A test points
(– 15 volts; analog ground; 15 volts)
B test points (Vcc;digital ground)
C battery IN/OUT (shown at OUT)
D test points TP3;TP5;TP4
E test link
F test point TP6
G test points TP1;TP2
H 50/60 hertz jumper
(shown at 60 hertz)
I data bus
J test point TP7
K test points (ground;Vcc)
L test points (Vcc; ground)
M test points (10.0 volts; analog ground)
N IG tube type select jumper
(both shown at Model 924)
P test point TP8

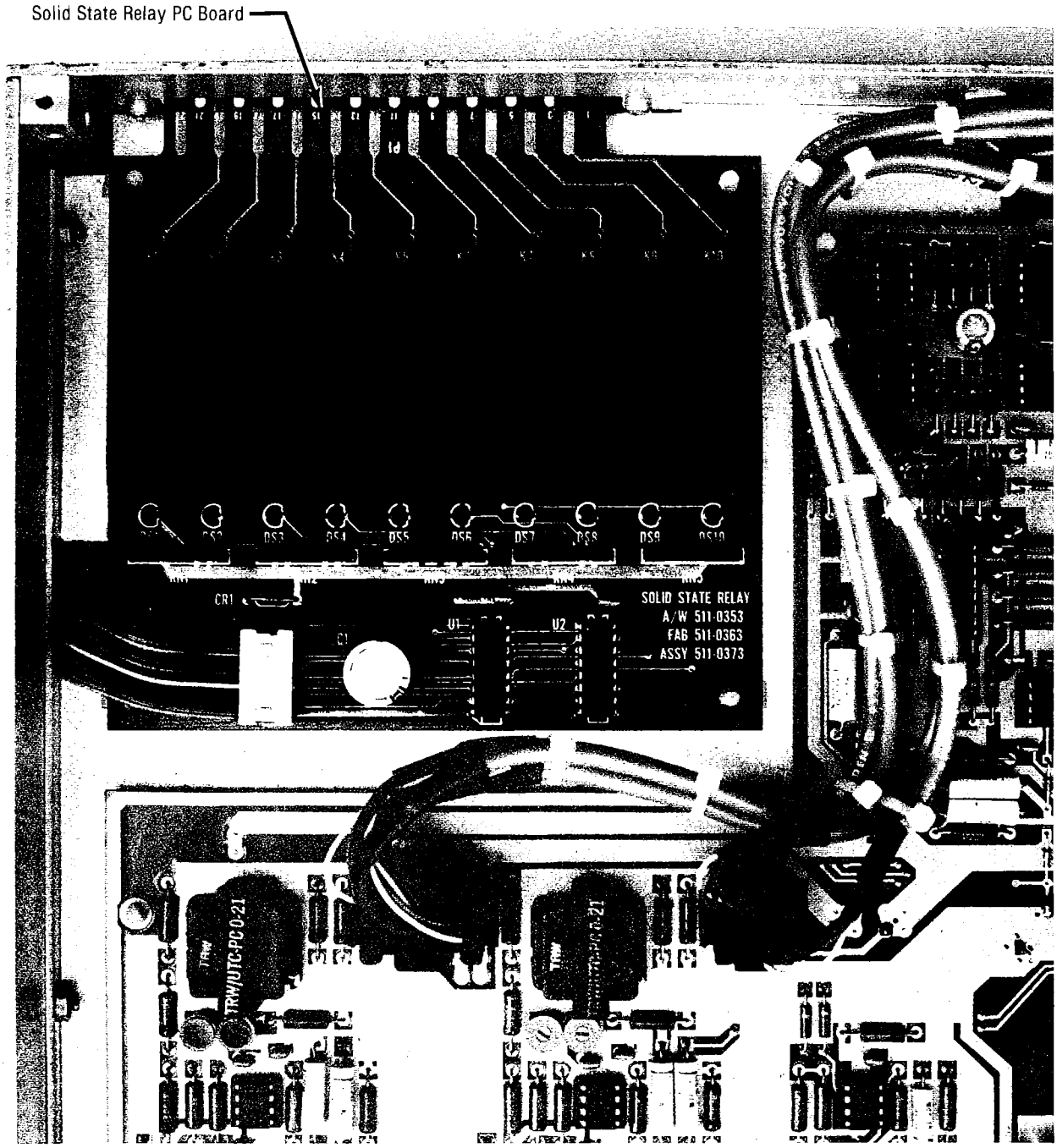

Photograph 6 VersaVac 2 and 5 gauge, optional solid state relay PC board

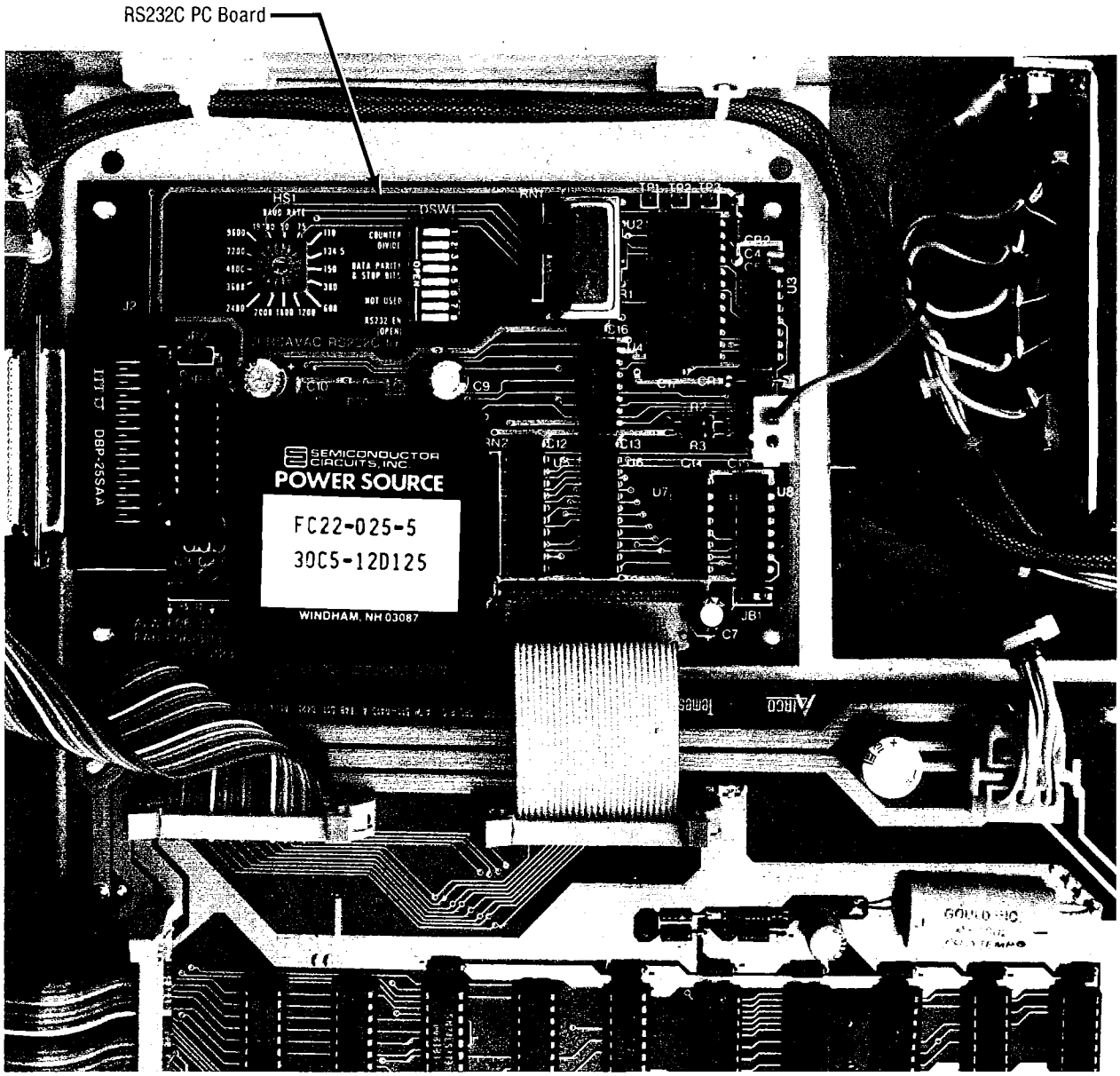

P-77367

Photograph 7 Optional RS232C PC board

DESCRIPTION	ITEM	PART NO.	SUB ASSY	QTY.

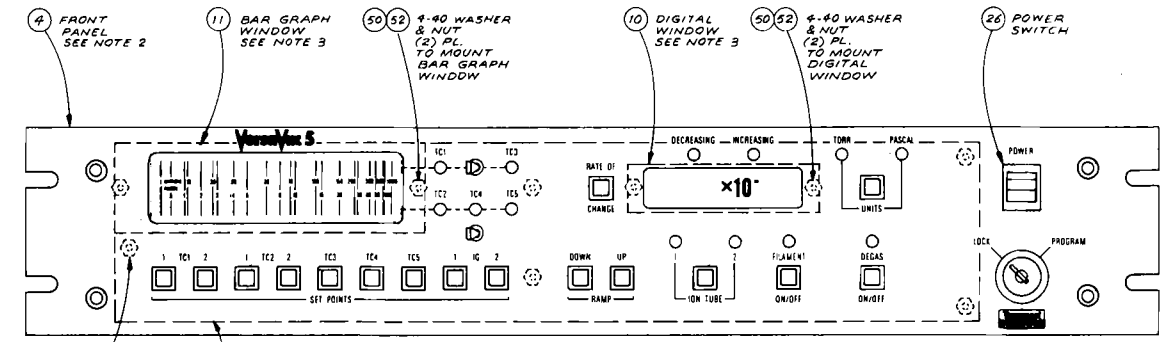

FRONT VIEW

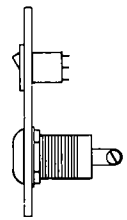

SIDE VIEW

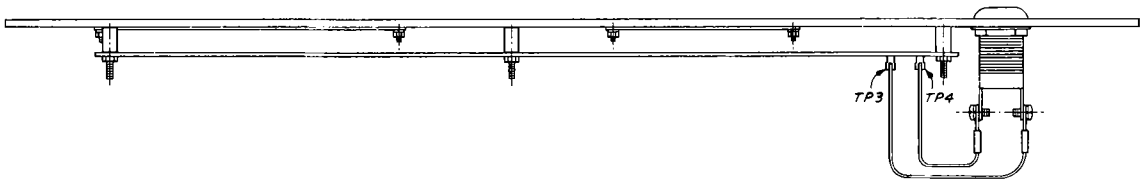

BOTTOM VIEW

KEYLOCK SWITCH WIRING

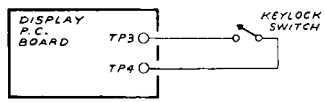

NOTES:

1. SCHEMATIC REF. 511-0174.
2. WHEN ASSEMBLING THE FRONT PANEL OF THE VERSAVAC '2' THERE ARE FEWER SWITCHES AND LIGHTS ON THE DISPLAY P.C. BOARD AND FEWER CORRESPONDING HOLES IN THE FRONT PANEL.
3. INSTALLATION OF WINDOWS: THE 'BAR GRAPH' WINDOW AND THE 'DIGITAL' WINDOW ARE MOUNTED BEHIND THE FRONT PANEL. LINE UP WINDOWS SO THEY ARE PARALLEL WITH THE TOP EDGE OF THE FRONT PANEL. TIGHTEN NUTS ON THE 'DIGITAL' WINDOW; ADJUST THE 'BAR GRAPH' WINDOW SO THE '1 MICRON' LINE ON THE LEFT IS 3/16" AWAY FROM THE NEAREST EDGE OF THE FRONT PANEL AND THEN TIGHTEN NUTS.

REV	DESCRIPTION	BY	DATE	APP'VD
B	WINDOW ITEM (10) & (11) WERE MOUNTED WITH 2-56 HARDWARE; LOGO WAS 'AIRCO' PER DCN 15390	JS	5-15-85	RB
A	SHT. 2 - ADDED "D" CONNECTOR COVER. SHT. 3 - XFMR WIRING: 7.5V WAS GY, 10V WAS BR. SHT. 4 - ADDED (2) TIE WRAPS AND GROMMET STRIP TO TOP VIEW, ADD 'HV' LABELS TO COVERS	JS	4-29-82	RB

UNLESS OTHERWISE SPECIFIED

BREAK ALL EDGES — DEBURR — USED ON DWG. NO. — DO NOT SCALE DRAWING

FINISH — TOLERANCE — CHAMFER ENDS OF ALL SCREW THREADS 30° THREADS CLASS 2

AIRCO Temescal — A DIVISION OF AIRCO, INC. Berkeley, California

DRAWN BY JULIE STEPHENS — DATE 12/10/81 — CHK BY RB — APP BY RB — SCALE NONE

VERSAVAC

FINAL ASSEMBLY (FRONT PANEL)

DRAWING NUMBER 511-0164 — SHEET 1 OF 4 — REV B

USE PARTS LIST NO. 0511-0164-0 FOR VERSAVAC '2'
USE PARTS LIST NO. 0511-0164-1 FOR VERSAVAC '5'

PARTS LIST NO 0511-0164-0 APPROVED

DESCRIPTION	ITEM	PART NO.	SUB ASSY.	QTY.

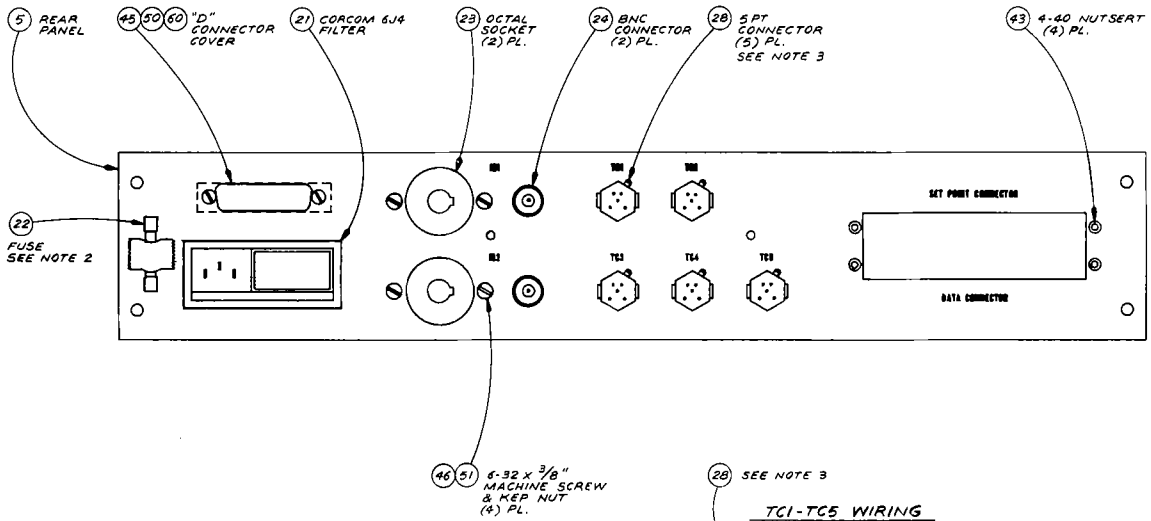

IG1-IG2 WIRING

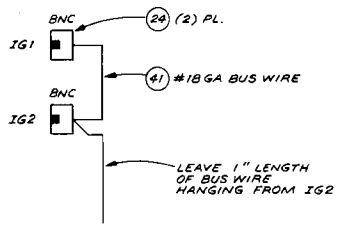

TC1-TC5 WIRING

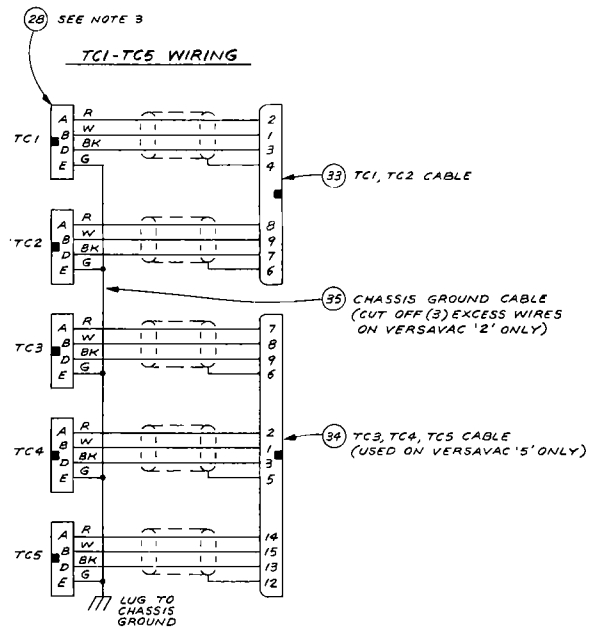

NOTES:

1. SCHEMATIC REF. 511-0174.
2. ATTACH FUSE WITH TAPE TO PANEL APPROXIMATELY AS SHOWN.
3. VERSAVAC '5' IS AS SHOWN; VERSAVAC '2' HAS ONLY (2) 5 PT. CONNECTORS (ITEM 28). INSERT HOLE PLUG (ITEM 54) IN TC3, TC4 & TC5 LOCATIONS.

	SEE SHEET 1		
REV.	DESCRIPTION	BY	DATE	APP'VD

UNLESS OTHERWISE SPECIFIED
BREAK ALL EDGES — INTER. RADII
USED ON DWG. NO. — DO NOT SCALE DRAWING
FINISH — TOLERANCE — CHAMFER ENDS OF ALL SCREW THREADS 30° THREADS CLASS 2

AIRCO Temescal — A DIVISION OF AIRCO, INC. Berkeley, California

DRAWN BY JULIE STEPHENS — DATE 12/10/81 — CHK BY RB — APP BY RB — SCALE NONE

VERSAVAC

FINAL ASSEMBLY (REAR PANEL)

DRAWING NUMBER 511-0164 SHEET 2 OF 4 — B

PARTS LIST NO. 0511-0164-0 APPLIES

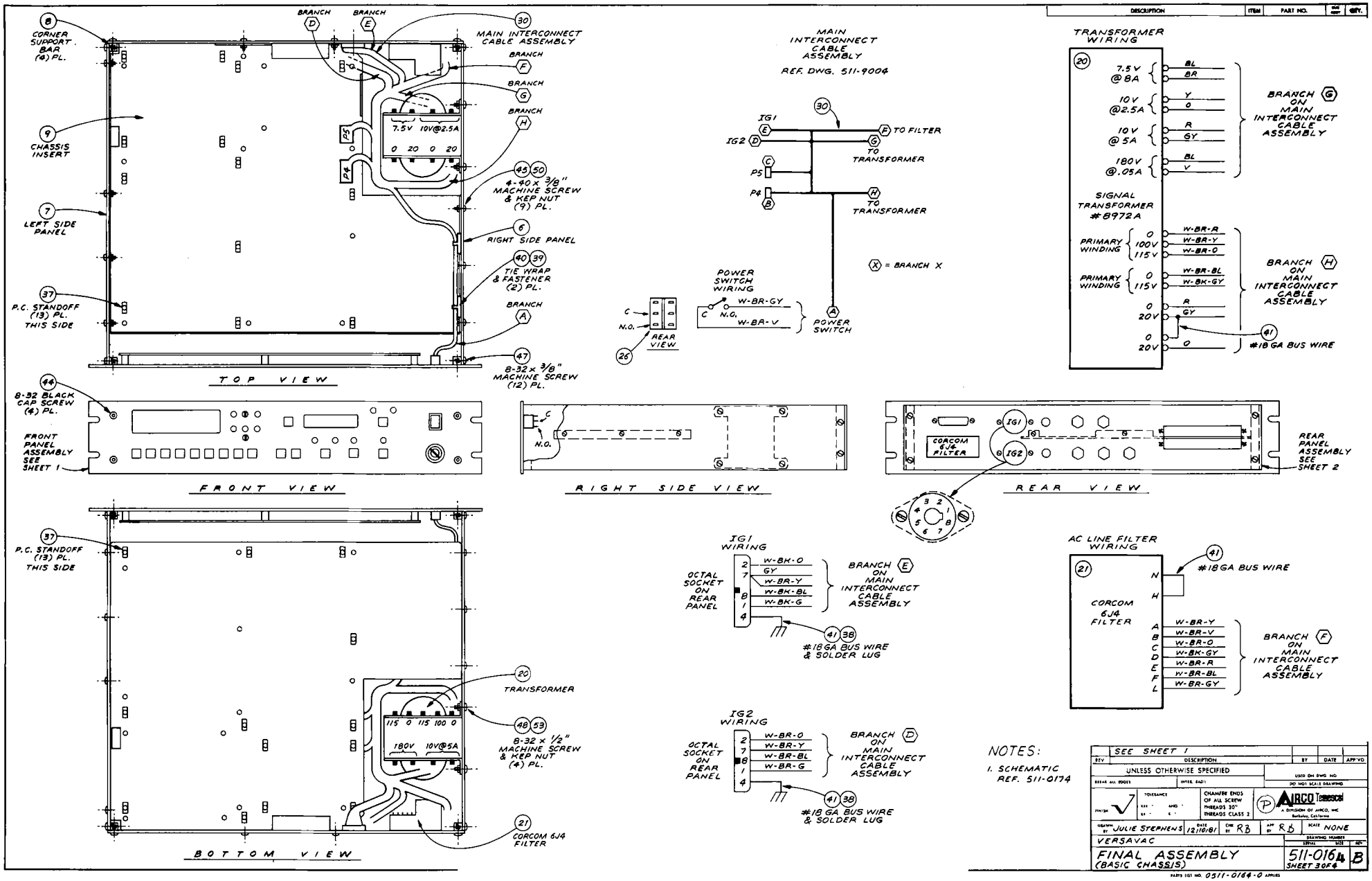
DESCRIPTION
ITEM
PART NO.
QTY.
TOP VIEW
FRONT VIEW
RIGHT SIDE VIEW
REAR VIEW
BOTTOM VIEW
8 CORNER SUPPORT BAR (4) PL.
9 CHASSIS INSERT
7 LEFT SIDE PANEL
37 P.C. STANDOFF (13) PL. THIS SIDE
44 8-32 BLACK CAP SCREW (4) PL.
FRONT PANEL ASSEMBLY SEE SHEET 1
BRANCH D
BRANCH E
30 MAIN INTERCONNECT CABLE ASSEMBLY
BRANCH F
BRANCH G
BRANCH H
45 50 4-40 x 3/8" MACHINE SCREW & KEP NUT (9) PL.
6 RIGHT SIDE PANEL
40 39 TIE WRAP & FASTENER (2) PL.
BRANCH A
47 8-32 x 3/8" MACHINE SCREW (12) PL.
P5
P4
7.5V 10V@2.5A
0 20 0 20
C
N.O.
REAR VIEW
26
CORCOM 6J4 FILTER
IG1
IG2
REAR PANEL ASSEMBLY SEE SHEET 2
20 TRANSFORMER
48 53 8-32 x 1/2" MACHINE SCREW & KEP NUT (4) PL.
21 CORCOM 6J4 FILTER
115 0 115 100 0
180V 10V@5A
MAIN INTERCONNECT CABLE ASSEMBLY
REF. DWG. 511-9004
IG1
IG2
E
D
C
B
F TO FILTER
G TO TRANSFORMER
H TO TRANSFORMER
A
X = BRANCH X
POWER SWITCH WIRING
W-BR-GY
W-BR-V
POWER SWITCH
TRANSFORMER WIRING
7.5V @8A
BL
BR
10V @2.5A
Y
O
10V @5A
R
GY
180V @.05A
BL
V
BRANCH G ON MAIN INTERCONNECT CABLE ASSEMBLY
SIGNAL TRANSFORMER #8972A
PRIMARY WINDING
0
100V
115V
W-BR-R
W-BR-Y
W-BR-O
PRIMARY WINDING
0
115V
W-BR-BL
W-BK-GY
0 20V
R
GY
0 20V
O
BRANCH H ON MAIN INTERCONNECT CABLE ASSEMBLY
41 #18 GA BUS WIRE
IG1 WIRING
OCTAL SOCKET ON REAR PANEL
2
7
8
1
4
W-BK-O
GY
W-BR-Y
W-BK-BL
W-BK-G
BRANCH E ON MAIN INTERCONNECT CABLE ASSEMBLY
41 38 #18 GA BUS WIRE & SOLDER LUG
IG2 WIRING
OCTAL SOCKET ON REAR PANEL
2
7
8
1
4
W-BR-O
W-BR-Y
W-BR-BL
W-BR-G
BRANCH D ON MAIN INTERCONNECT CABLE ASSEMBLY
41 38 #18 GA BUS WIRE & SOLDER LUG
AC LINE FILTER WIRING
21
CORCOM 6J4 FILTER
N
H
A
B
C
D
E
F
L
W-BR-Y
W-BR-V
W-BR-O
W-BK-GY
W-BR-R
W-BR-BL
W-BR-GY
BRANCH F ON MAIN INTERCONNECT CABLE ASSEMBLY
41 #18 GA BUS WIRE
NOTES:
1. SCHEMATIC REF. 511-0174
SEE SHEET 1
REV.
DESCRIPTION
BY
DATE
APP'VD
UNLESS OTHERWISE SPECIFIED
BREAK ALL EDGES
DO NOT SCALE DRAWING
FINISH
CHAMFER ENDS OF ALL SCREW THREADS 30° THREADS CLASS 2
ARCO ELECTRONICS
A DIVISION OF ARCO, INC
Berkeley, California
DRAWN BY JULIE STEPHENS
DATE 12/10/81
CHK BY RB
APP BY RB
SCALE NONE
VERSAVAC
FINAL ASSEMBLY (BASIC CHASSIS)
DRAWING NUMBER
511-0164
SIZE B
SHEET 3 OF 4
PARTS LIST NO. 0511-0164-0 APPLIES

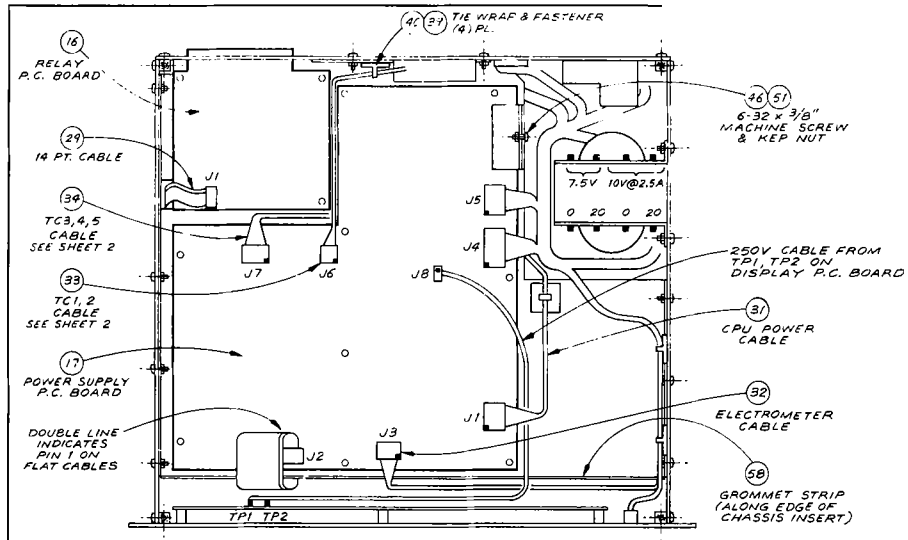

TOP VIEW

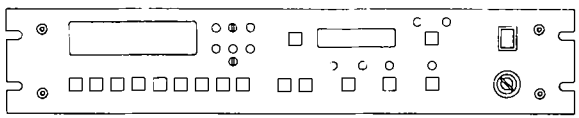

FRONT VIEW

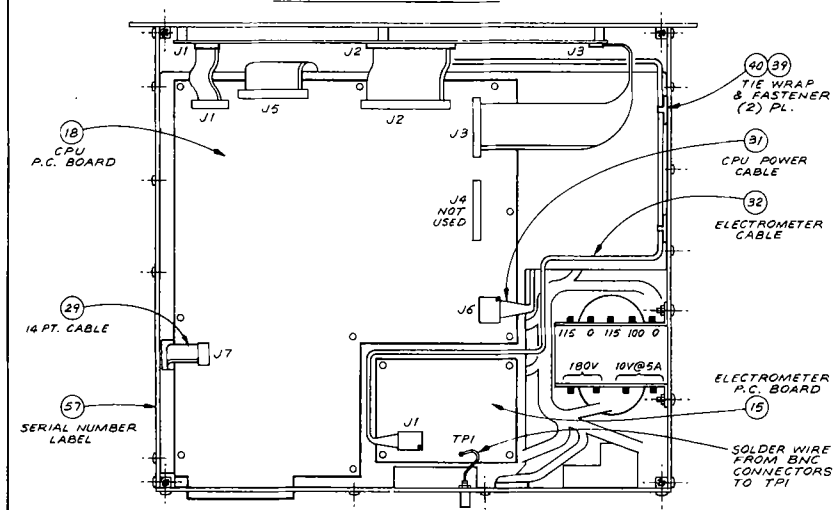

BOTTOM VIEW

DESCRIPTION	ITEM	PART NO.	SUB ASSY	QTY.

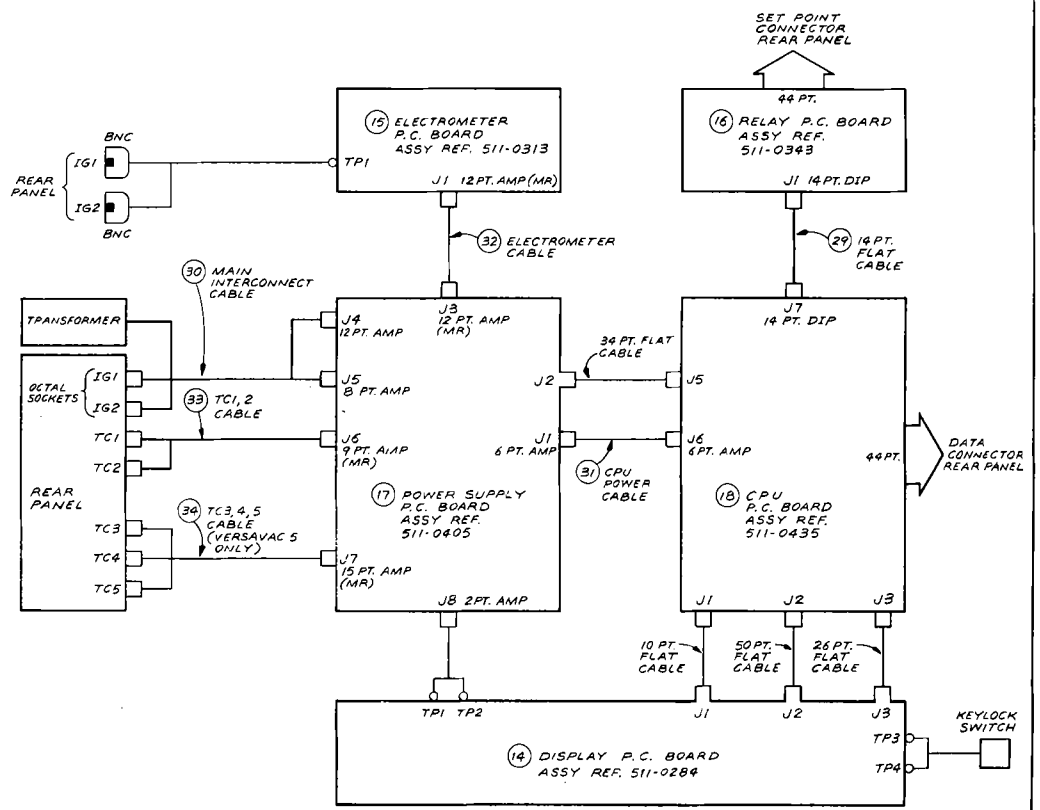

NOTES:

1. SCHEMATIC REF. 511-0174.

COVER INSTALLATION

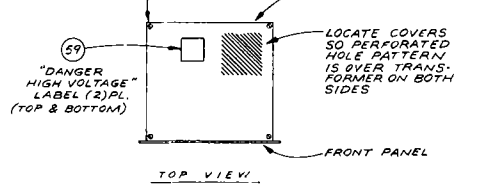

TOP VIEW

SEE SHEET 1				
REV.	DESCRIPTION	BY	DATE	APP'VD
UNLESS OTHERWISE SPECIFIED			USED ON DWG. NO.	
BREAK ALL EDGES	ENTER BAD-1		DO NOT SCALE DRAWING	
FINISH √	TOLERANCE .XX ± .XXX ± .XXX ± ANG ±	CHAMFER ENDS OF ALL SCREW THREADS 30° THREADS CLASS 2	(P) ABCO Telescal A DIVISION OF ABCO, INC. Berkeley, California	
DRAWN BY JULIE STEPHENS	DATE 12/10/81	CHK BY RB	APP BY RB	SCALE NONE
VERSAVAC			DRAWING NUMBER FINAL SIZE	REV
FINAL ASSEMBLY (FINAL CHASSIS)			511-016 SHEET 4 OF 4	B

PARTS LIST NO. 0511-0184-0 APPLIES

WARNING: MICRO FILM CHANGE CONTROL

DRAWING NO.	REV.	CHK. DATE	APPV. DATE	AMPEX Temescal PARTS LIST	1/4	TOTAL NO. OF UNITS	ENG. RELEASE BY - DATE	PROJ./WORK ORDER NO.
0511-0164-0	B							
DWG. TITLE Versa Vac 2 Final Assembly							PLANNER - DATE	NEXT ASS'Y W/O NO.
JOB TITLE				NEXT ASS'Y			ACCT. / PLANN. / STORES / STAGE / I.C. / OTHER	

DESCRIPTION	ITEM	PART/STOCK NO.	SUB	UNIT QUAN.	TOTAL REQ.	STORES ISS.	STORES CODE	DEC. FT.	P.O. NO. - VENDOR - DATE REMARKS - NOTES - MISC.
Assembly 511-0164	1						Ref.		
Schematic 511-0174	2						Ref.		
	3								
Front Panel Fab	4	0511-7904-0		1					
Rear Panel Fab	5	0511-0183-0		1					
Right Side Panel Fab	6	0511-0203-0		1					
Left Side Panel Fab	7	0511-0213-0		1					
Corner Support Bar Fab	8	0511-0231-0		4					
Chassis insert Fab	9	0511-0254-0		1					
Digital Window Fab	10	0511-0472-0		1					
Bar Graph Window Fab	11	0511-0492-0		1					
Top, Bottom Cover Fab	12	0511-0224-0		2					
	13								
Display P.C. Assembly	14	0511-0284-0	X	1					
Electrometer P.C. Assembly	15	0511-0313-0	X	1					
Relay P.C. Assembly	16	0511-0343-0	X	1					

DRAWING NO.	REV.	CHK. DATE	APPV. DATE	AIRCO Temescal PARTS LIST	2/4	TOTAL NO. OF UNITS	ENG. RELEASE BY - DATE	PROJ./WORK ORDER NO.
0511-0164-0	B							
DWG. TITLE Versa Vac 2 Final Assembly							PLANNER - DATE	NEXT ASS'Y W/O NO.
JOB TITLE				NEXT ASS'Y			ACCT. / PLANN. / STORES / STAGE / I.C. / OTHER	

DESCRIPTION	ITEM	PART/STOCK NO.	SUB	UNIT QUAN.	TOTAL REQ.	STORES ISS.	STORES CODE	DEC. FT.	P.O. NO. - VENDOR - DATE REMARKS - NOTES - MISC.
Power Supply P.C. Assembly	17	0511-0405-0	X	1					
CPU P.C. Assembly	18	0511-0435-0	X	1					
	19								
Power Transformer 8972A	20	6054-8972-0		1					Signal XFMR Co.
Line Filter Corcom 6J4	21	6261-0035-0		1					
Fuse 3A 3AG	22	6056-0659-0		1					
Socket 8pt 77M1P8 Amphenol	23	6047-0028-0		2					IG 1,2 rear panel
BNC Connector KC-74-12 king	24	6047-4472-0		2					IC 1,2 collector, rear panel
Keylock Switch	25	6156-0012-0		1					ALCO SWK-13-1
Power Switch	26	6156-7201-5		1					C & K 7201-J51
Power Cord	27	6338-1725-0		1					
Connector 5 pt 126-218 Amphenol	28	6047-0005-2		2					TC1 - TC2 rear panel
14 pt Cable Assembly	29	0511-8322-0	X	1					CPU to relay P.C.B.
Main Interconnect Cable Assy	30	0511-9004-0	X	1					
CPU Power Cable Assy	31	0511-9012-0	X	1					
Electrometer Cable Assy	32	0511-9022-0	X	1					

DRAWING NO.	REV.	CHK. DATE	APPV. DATE	AMPEX Temescal PARTS LIST	3/4	TOTAL NO. OF UNITS	ENG. RELEASE BY - DATE	PROJ./WORK ORDER NO.
0511-0164-0	B							
DWG. TITLE Versa Vac 2 Final Assembly							PLANNER - DATE	NEXT ASS'Y W/O NO.
JOB TITLE				NEXT ASS'Y			ACCT. / PLANN. / STORES / STAGE / I.C. / OTHER	

DESCRIPTION	ITEM	PART/STOCK NO.	SUB	UNIT QUAN.	TOTAL REQ.	STORES ISS.	STORES CODE	DEC. FT.	P.O. NO. - VENDOR - DATE REMARKS - NOTES - MISC.
TC 1,2 Cable Assy	33	0511-9032-0	X	1					
	34								
Chassis Ground Cable Assy	35	0511-9091-0	X	1					
	36								
P.C. Standoff Richco CBS - 3N	37	6040-8753-0		26					items 15-18
Solder lug	38	6044-1289-1		2					
Fastener, tie wrap	39	6348-0001-0		6					B
Tie wrap	40	6348-0371-5		7					B
Bus wire #18 ga	41	6338-0190-0		0.75					
Standoff 7/16" threaded #9230 Smith	42	6040-9230-0		5					Front panel to display P.C.B.
Nutsert 4-40	43	6040-9220-0		4					Rear panel B
Cap screw 8-32 flathead, black oxide finish, allen	44	1241-0010-0		4					McMaster-Carr stock #91253A192
Machine screw 4-40 x 3/8"	45	1240-0854-0		II					B
Machine screw 6-32 x 3/8"	46	1240-1254-0		13					
Machine screw 8-32 x 3/8"	47	1240-1454-0		12					
Machine screw 8-32 x 1/2"	48	1240-1455-0		4					item 20

DRAWING NO.	REV.	CHK. DATE	APPV. DATE	AMCO Temescal PARTS LIST	4/4	TOTAL NO. OF UNITS	ENG. RELEASE BY - DATE	PROJ./WORK ORDER NO.
0511-0164-0	B							
DWG. TITLE Versa Vac 2 Final Assy							PLANNER - DATE	NEXT ASS'Y W/O NO.
JOB TITLE				NEXT ASS'Y			ACCT. / PLANN. / STORES / STAGE / I.C. / OTHER	

DESCRIPTION	ITEM	PART/STOCK NO.	SUB	UNIT QUAN.	TOTAL REQ.	STORES ISS.	STORES CODE	DEC. FT.	P.O. NO. - VENDOR - DATE REMARKS - NOTES - MISC.
Nut 2-56	49	1260-0402-0		4					
Nut 4-40 Kep	50	1258-0800-0		I6					
Nut 6-32 Kep	51	1258-1201-0		5					
Washer 2-56 ss	52	1378-0400-0		4					
Nut 8-32 Kep	53	1258-1401-0		4					item 20
Hole plug 1/2"	54	6047-2645-6		3					TC 3,4, & 5 on rear panel
CONN. ASSY., SET POINT	55	05II-9522-0	x	I					
CONN. ASSY., DATA	56	05II-9532-0	x	I					
NAMEPLATE	57	0206-II82-0		I					
GROMMET STRIP	58	2027-0020-0		I.4'					
HIGH VOLTAGE LABELS	59	664I-7236-4		2					
COVER PLATE REAR PANEL RS 232	60	0605-305190		I					

WARNING: MICRO FILM CHANGE CONTROL 1-5-82

DRAWING NO.	REV.	CHK. DATE	APPV. DATE	Tenescal ③ PARTS LIST	1/4	TOTAL NO. OF UNITS	ENG. RELEASE BY - DATE	PROJ./WORK ORDER NO.
0511-0164-1	A							
DWG. TITLE Versa Vac 5 Final Assembly							PLANNER - DATE	NEXT ASS'Y W/O NO.
JOB TITLE				NEXT ASS'Y			ACCT. / PLANN. / STORES / STAGE / I.C. / OTHER	

DESCRIPTION	ITEM	PART/STOCK NO.	SUB	UNIT QUAN.	TOTAL REQ.	STORES ISS.	STORES CODE	DEC. FT.	P.O. NO. - VENDOR - DATE REMARKS - NOTES - MISC.
Assembly 511-0164	1						Ref.		
Schematic 511-0174	2						Ref.		
	3								
Front Panel Fab	4	0511-0104-0		1					
Rear Panel Fab	5	0511-0183-0		1					
Right Side Panel Fab	6	0511-0203-0		1					
Left Side Panel Fab	7	0511-0213-0		1					
Corner Support Bar Fab	8	0511-0231-0		4					
Chassis Insert Fab	9	0511-0254-0		1					
Digital Window Fab	10	0511-0472-0		1					
Bar Graph Window Fab	11	0511-0492-0		1					
Top, Bottom Cover Fab	12	0511-0224-0		2					
	13								
Display P.C. Assembly	14	0511-0284-1	X	1					
Electrometer P.C. Assembly	15	0511-0313-0	X	1					
Relay P.C. Assembly	16	0511-0343-1	X	1					

DRAWING NO.	REV.	CHK. DATE	APPV. DATE	ALNICO Temescal PARTS LIST	2/4	TOTAL NO. OF UNITS	ENG. RELEASE BY - DATE	PROJ./WORK ORDER NO.
0511-0164-1	A							
DWG. TITLE Versa Vac 5 Final Assembly							PLANNER - DATE	NEXT ASS'Y W/O NO.
JOB TITLE				NEXT ASS'Y			ACCT. / PLANN. / STORES / STAGE / I.C. / OTHER	

DESCRIPTION	ITEM	PART/STOCK NO.	SUB	UNIT QUAN.	TOTAL REQ.	STORES ISS.	STORES CODE	DEC. FT.	P.O. NO. - VENDOR - DATE REMARKS - NOTES - MISC.
Power Supply P.C. Assembly	17	0511-0405-1	X	1					
CPU P.C. Assembly	18	0511-0435-0	X	1					
	19								
Power transformer 8972A	20	6054-8972-0		1					Signal XFMR Co.
Line filter Corcom 6J4	21	6261-0035-0		1					
Fuse 3A 3AG	22	6056-0659-0		1					
Socket 8pt 77M1P8 Amphenol	23	6047-0028-0		2					IC1,2 rear panel
BNC Connector KC-74-12 King	24	6047-4472-0		2					IG1,2 collector, rear panel
Keylock Switch	25	6156-0012-0		1					ALCO SWK-13-1
Power Switch	26	6156-7201-5		1					C & K 7201-J51
Power Cord	27	6338-1725-0		1					
Connector 5 pt 126-218 Amphenol	28	6047-0005-2		5					TC1-TC5 rear panel
14 pt Cable Assembly	29	0511-8322-0	X	1					CPU to relay P.C.B.
Main Interconnect Cable Assy	30	0511-9004-0	X	1					
CPU Power Cable Assy	31	0511-9012-0	X	1					
Electrometer Cable Assy	32	0511-9022-0	X	1					

DRAWING NO.	REV.	CHK. DATE	APPV. DATE	AMCO Temescal PARTS LIST	3/4	TOTAL NO. OF UNITS	ENG. RELEASE BY - DATE	PROJ./WORK ORDER NO.
0511-0164-1	A							
DWG. TITLE Versa Vac 5 Final Assembly							PLANNER - DATE	NEXT ASS'Y W/O NO.
JOB TITLE				NEXT ASS'Y			ACCT. / PLANN. / STORES / STAGE / I.C. / OTHER	

DESCRIPTION	ITEM	PART/STOCK NO.	SUB	UNIT QUAN.	TOTAL REQ.	STORES ISS.	STORES CODE	DEC. FT.	P.O. NO. - VENDOR - DATE REMARKS - NOTES - MISC.
TC 1,2 cable Assy	33	0511-9032-0	X	1					
TC 3,4,5 cable Assy	34	0511-9042-0	X	1					
Chassis Ground Cable Assy	35	0511-9091-0	X	1					
	36								
P.C. Standoffs Richco CBS-3N	37	6040-8753-0		26					items 15-18
Solder lug	38	6044-1289-1		2					
Fastener, tie wrap	39	6348-0001-0		6					A
Tie wrap	40	6348-0371-5		7					A
Bus wire #18 ga,	41	6338-0190-0		.75'					
Standoff 7/16" threaded #9230 Smith	42	6040-9230-0		5					Front panel to display P.C.B.
Nutsert 4-40	43	6040-9220-0		4					Rear panel A
Cap Screw 8-32 flathead, black oxide finish, allen	44	1241-0010-0		4					McMaster - Carr Stock #91253A192
Machine Screw 4-40 x 3/8"	45	1240-0854-0		11					A
Machine Screw 6-32 x 3/8"	46	1240-1254-0		13					
Machine Screw 8-32 x 3/8"	47	1240-1454-0		12					
Machine Screw 8-32 x 1/2"	48	1240-1455-0		4					item 20

DRAWING NO.	REV.	CHK. DATE	APPV. DATE	ARCO Temescal **PARTS LIST**	4/4	TOTAL NO. OF UNITS	ENG. RELEASE BY - DATE	PROJ./WORK ORDER NO.
0511-0164-1	A							
DWG. TITLE Versa Vac 5 Final Assy							PLANNER - DATE	NEXT ASS'Y W/O NO.
JOB TITLE				NEXT ASS'Y			ACCT. / PLANN. / STORES / STAGE / I.C. / OTHER	

DESCRIPTION	ITEM	PART/STOCK NO.	SUB	UNIT QUAN.	TOTAL REQ.	STORES ISS.	STORES CODE	DEC. FT.	P.O. NO. - VENDOR - DATE REMARKS - NOTES - MISC.
Nut 2-56	49	1260-0402-0		4					
Nut 4-40 Kep	50	1258-0800-0		16					A
Nut 6-32 Kep	51	1258-1201-0		5					
Washer 2-56 ss	52	1378-0400-0		4					
Nut 8-32 Kep	53	1258-1401-0		4					item 20
	54								A
CONN. ASSY. SET POINT	55	0511-9522-0		1					A
CONN. ASSY. DATA	56	0511-9532-0		1					A
NAMEPLATE	57	0206-1182-0		1					A
GROMMET STRIP	58	2027-0020-0		1.4'					A
HIGH VOLTAGE LABEL	59	6641-7236-4		2					A
COVER PLATE REAR PANEL RS 232	60	0605-3051-0		1					A

Ground TP7 to reset

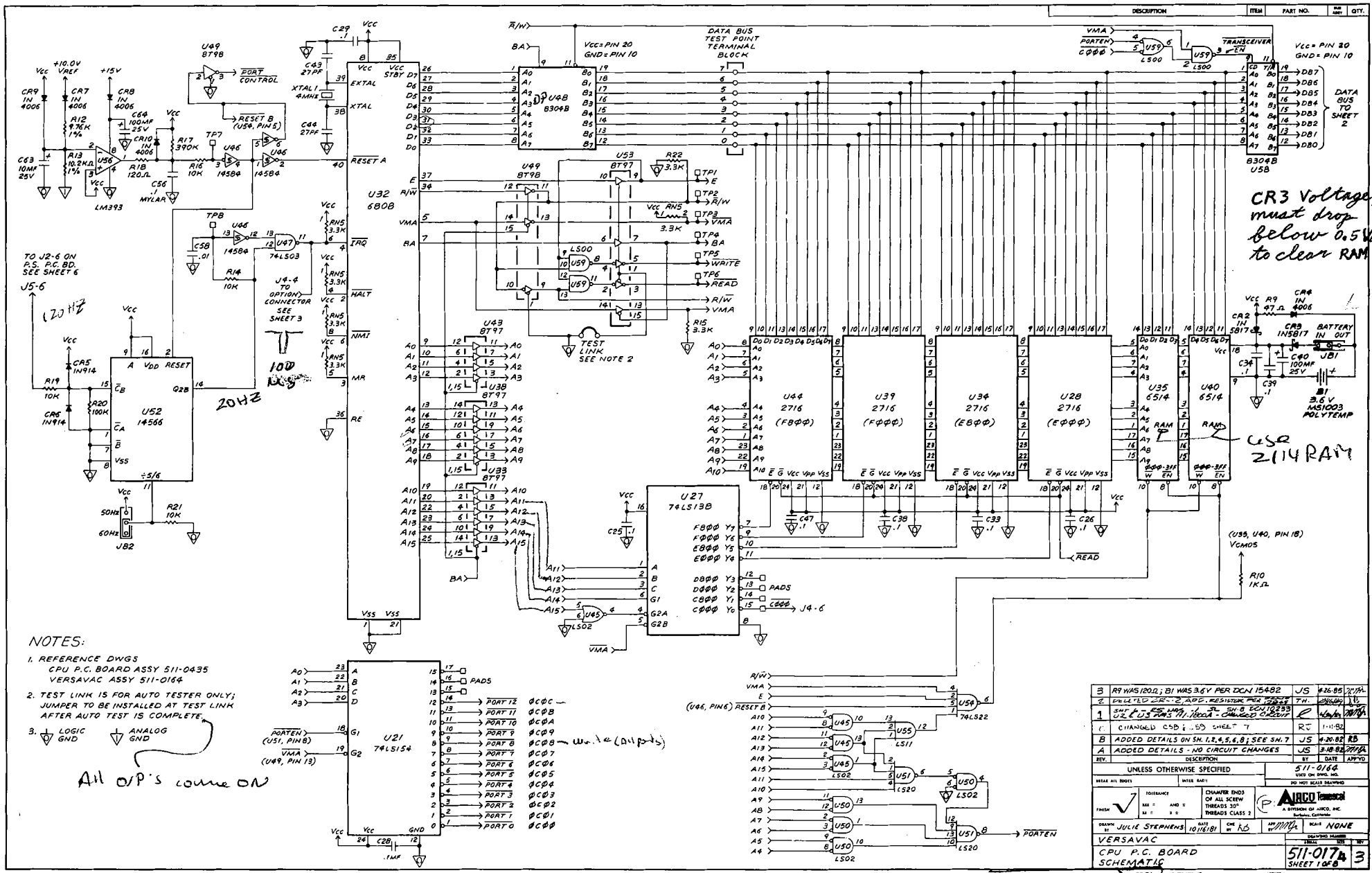

NOTES:

1. REFERENCE DWGS
   CPU P.C. BOARD ASSY 511-0435
   VERSAVAC ASSY 511-0164
2. TEST LINK IS FOR AUTO TESTER ONLY; JUMPER TO BE INSTALLED AT TEST LINK AFTER AUTO TEST IS COMPLETE.
3. LOGIC GND / ANALOG GND

REV.	DESCRIPTION	BY	DATE	APP'D
3	R9 WAS 120Ω; B1 WAS 3.6V PER DCN 15482	JS	4-26-85	
2	DELETED CR-2, ADD. RESISTOR PER DCN 15233	TH.	2-26-84	
1	SH. 6 & 7 ADDED U25 & U26 SH. 8 ADDED U18 & U33 U2, U3 WAS 74LS00A - CHANGED CIRCUIT			
C	CHANGED C58 ; .01 SHEET 7	RT	1-11-82	
B	ADDED DETAILS ON SH. 1,2,4,5,6,8; SEE SH. 7	JS	4-20-82	RB
A	ADDED DETAILS - NO CIRCUIT CHANGES	JS	3-18-82	

UNLESS OTHERWISE SPECIFIED — 511-0164 — DO NOT SCALE DRAWING

AIRCO Temescal — A DIVISION OF AIRCO, INC. Berkeley, California

DRAWN BY JULIE STEPHENS — DATE 10/16/81 — CHK BY KB — SCALE NONE

VERSAVAC

CPU P.C. BOARD SCHEMATIC

511-0164 SHEET 1 OF 8 — REV 3

WARNING: MICRO FILM CHANGE CONTROL

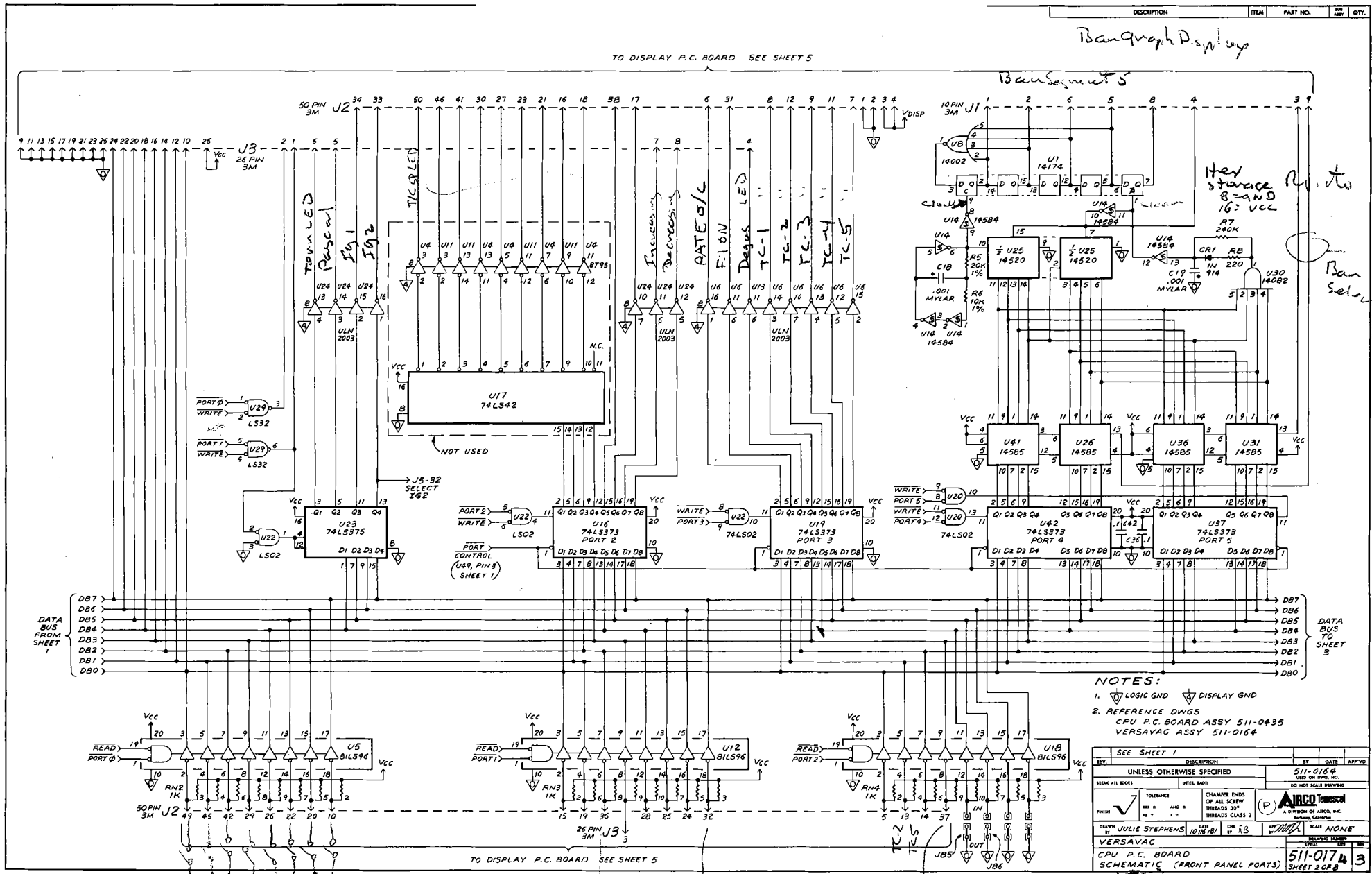
TO DISPLAY P.C. BOARD SEE SHEET 5
50 PIN 3M J2
10 PIN 3M J1
26 PIN 3M J3
U17 74LS542
NOT USED
U23 74LS375
U16 74LS373 PORT 2
U19 74LS373 PORT 3
U42 74LS373 PORT 4
U37 74LS373 PORT 5
U41 14585
U26 14585
U36 14585
U31 14585
U1 14174
U25 14520
U5 81LS96
U12 81LS96
U18 81LS96
DATA BUS FROM SHEET 1
DATA BUS TO SHEET 3
J5-32 SELECT IG2
PORT CONTROL (U49, PIN 3 SHEET 1)
NOTES:
1. LOGIC GND DISPLAY GND
2. REFERENCE DWGS
CPU P.C. BOARD ASSY 511-0435
VERSAVAC ASSY 511-0164
SEE SHEET 1
UNLESS OTHERWISE SPECIFIED
AIRCO Temescal
A DIVISION OF AIRCO, INC.
Berkeley, California
DRAWN BY JULIE STEPHENS
SCALE NONE
VERSAVAC
CPU P.C. BOARD
SCHEMATIC (FRONT PANEL PORTS)
511-0174
SHEET 2 OF 8
3

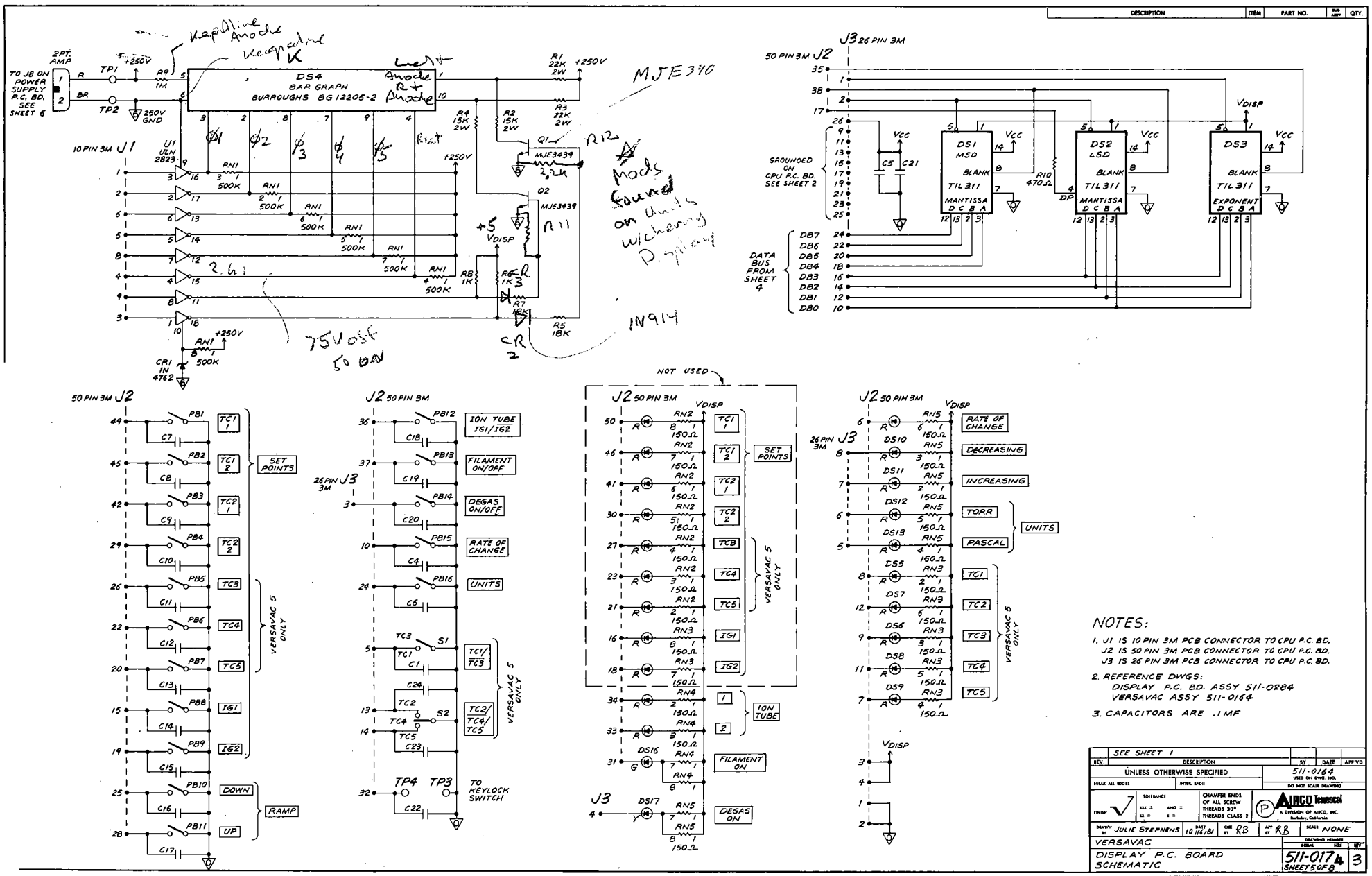
DESCRIPTION
ITEM
PART NO.
QTY.
2PT. AMP
TO J8 ON POWER SUPPLY P.C. BD. SEE SHEET 6
TP1
TP2
+250V
250V GND
R9 1M
DS4
BAR GRAPH
BURROUGHS BG12205-2
R1 22K 2W
R3 22K 2W
R4 15K 2W
R2 15K 2W
Q1
MJE3439
Q2
MJE3439
R11
R12
R5 18K
R6 1K
R7 10K
R8 1K
+5 VDISP
U1 ULN 2823
10 PIN 3M J1
RN1 500K
CR1 IN 4762
CR2
1N914
MJE370
50 PIN 3M J2
J3 26 PIN 3M
GROUNDED ON CPU P.C. BD. SEE SHEET 2
DATA BUS FROM SHEET 4
DS1 MSD
DS2 LSD
DS3
TIL311
MANTISSA
EXPONENT
BLANK
VCC
VDISP
R10 470Ω
C5
C21
DB7
DB6
DB5
DB4
DB3
DB2
DB1
DB0
NOT USED
SET POINTS
VERSAVAC 5 ONLY
RAMP
DOWN
UP
ION TUBE IG1/IG2
FILAMENT ON/OFF
DEGAS ON/OFF
RATE OF CHANGE
UNITS
TO KEYLOCK SWITCH
FILAMENT ON
DEGAS ON
DECREASING
INCREASING
TORR
PASCAL
NOTES:
1. J1 IS 10 PIN 3M PCB CONNECTOR TO CPU P.C. BD.
J2 IS 50 PIN 3M PCB CONNECTOR TO CPU P.C. BD.
J3 IS 26 PIN 3M PCB CONNECTOR TO CPU P.C. BD.
2. REFERENCE DWGS:
DISPLAY P.C. BD. ASSY 511-0284
VERSAVAC ASSY 511-0164
3. CAPACITORS ARE .1MF
SEE SHEET 1
UNLESS OTHERWISE SPECIFIED
511-0164
DO NOT SCALE DRAWING
AIRCO Temescal
A DIVISION OF AIRCO, INC.
Berkeley, California
DRAWN BY JULIE STEPHENS
DATE 10/16/81
CHK BY RB
APP BY RB
SCALE NONE
VERSAVAC
DISPLAY P.C. BOARD SCHEMATIC
511-017A
SHEET 5 OF 8
3

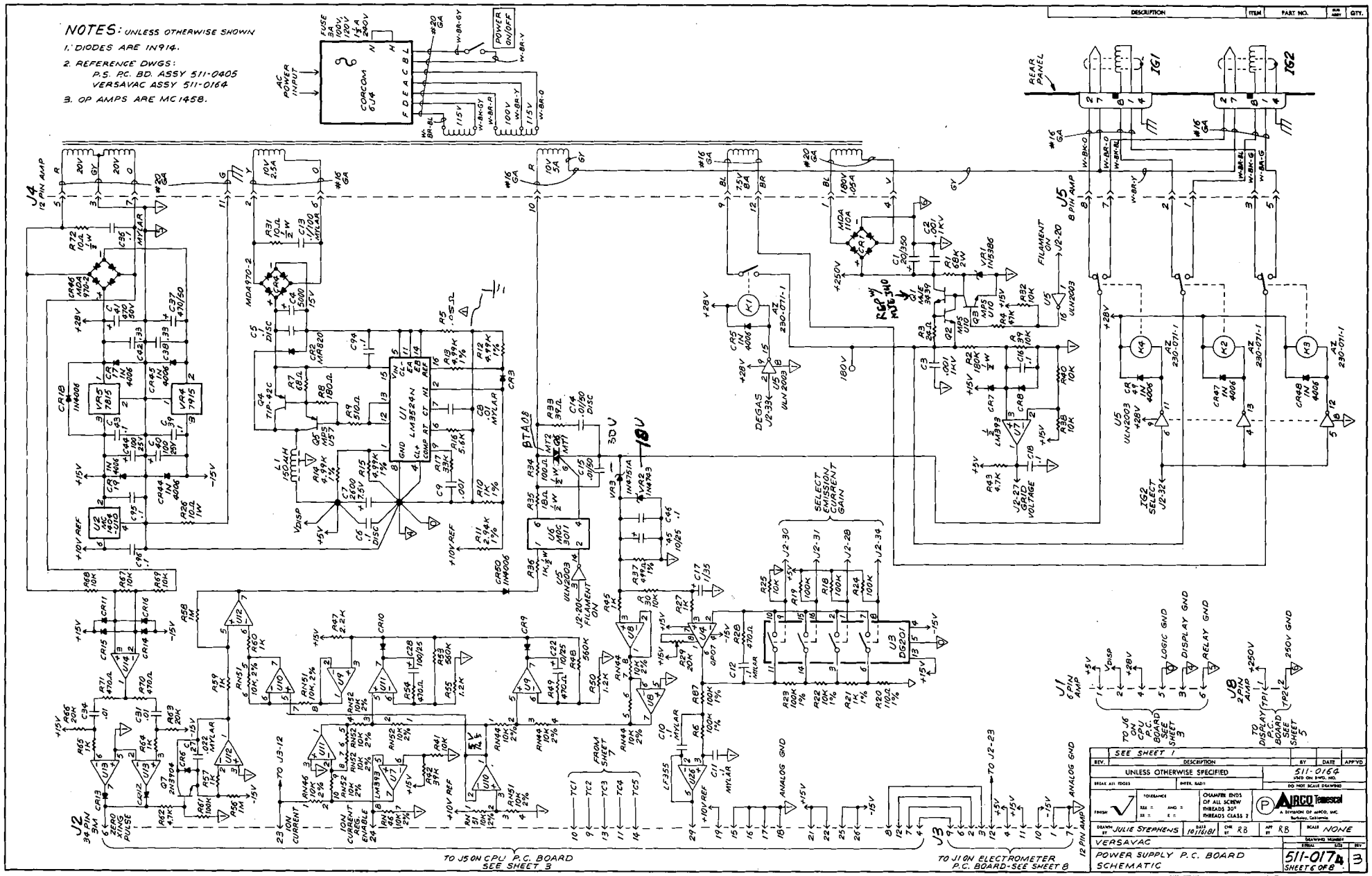
NOTES: UNLESS OTHERWISE SHOWN
1. DIODES ARE 1N914.
2. REFERENCE DWGS:
P.S. P.C. BD. ASSY 511-0405
VERSAVAC ASSY 511-0164
3. OP AMPS ARE MC1458.
AC POWER INPUT
FUSE 3A 100V, 120V, 1.5A 230V
CORCOM 6J4
POWER ON/OFF
REAR PANEL
IG1
IG2
J4 12 PIN AMP
J5 8 PIN AMP
J2 34 PIN SM
J3 12 PIN AMP
J1 6 PIN AMP
J8 2 PIN AMP
U1 LM3524N
U3 DG201
U5 ULN2003
U6 MOC 3011
U2 REF 1004-10
FILAMENT ON J2-20
DEGAS J2-33
J2-27 GRID VOLTAGE
IG2 SELECT J2-32
SELECT EMISSION CURRENT GAIN
TO J5 ON CPU P.C. BOARD SEE SHEET 3
TO J1 ON ELECTROMETER P.C. BOARD-SEE SHEET 8
TO J3-12
TO J2-23
FROM SHEET 7
ION CURRENT
ION CURRENT ENABLE
ZERO XING PULSE
LOGIC GND
DISPLAY GND
RELAY GND
250V GND
ANALOG GND
TO J6 ON CPU P.C. BOARD SEE SHEET 3
TO DISPLAY P.C. BOARD SEE SHEET 5
SEE SHEET 1
UNLESS OTHERWISE SPECIFIED
511-0164
VERSAVAC
POWER SUPPLY P.C. BOARD SCHEMATIC
511-0174
SHEET 6 OF 8
3
JULIE STEPHENS
NONE
AIRCO Telescal

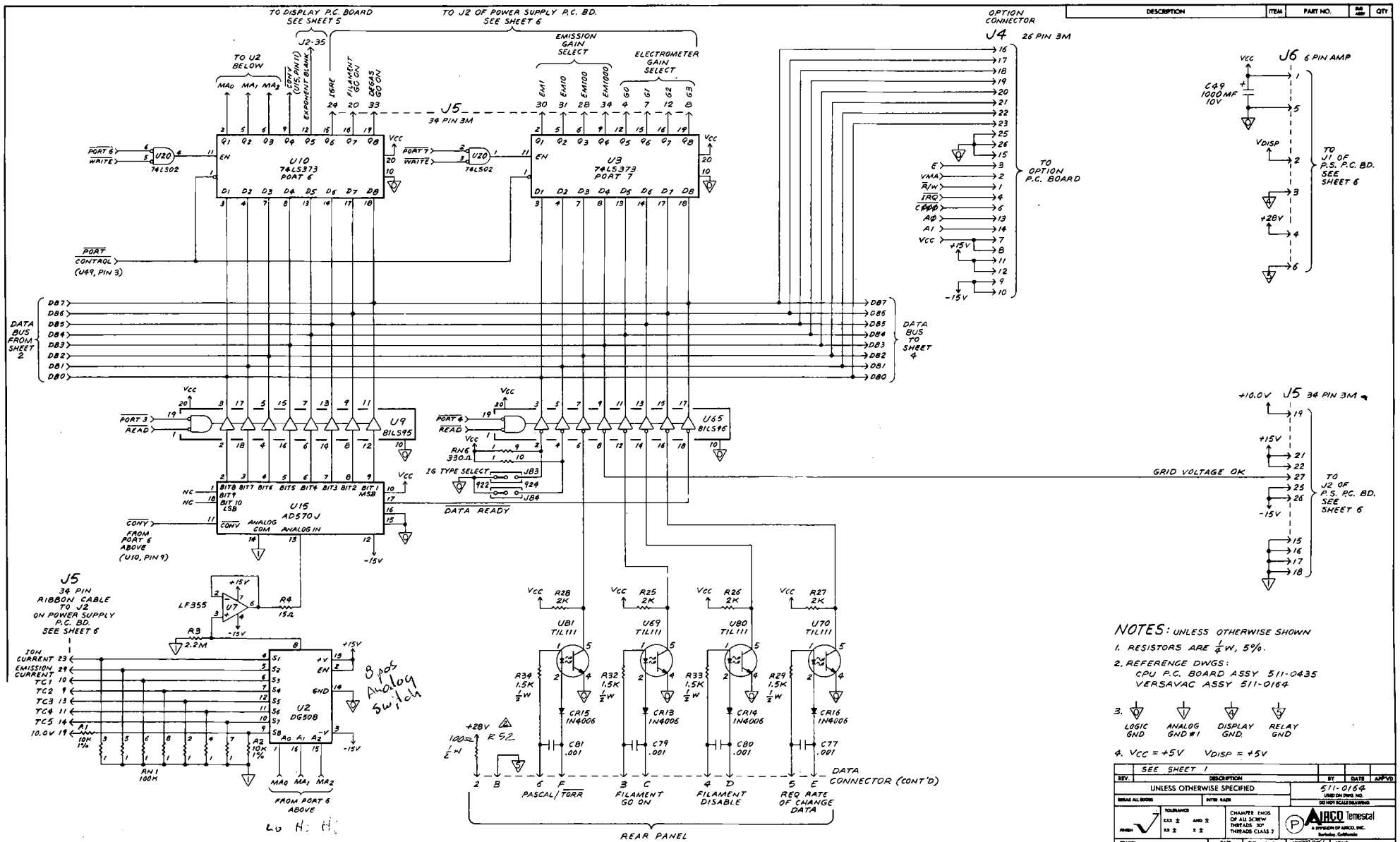

NOTES: UNLESS OTHERWISE SHOWN

1. RESISTORS ARE ¼W, 5%.
2. REFERENCE DWGS:
   CPU P.C. BOARD ASSY 511-0435
   VERSAVAC ASSY 511-0164
3. LOGIC GND, ANALOG GND, DISPLAY GND, RELAY GND
4. VCC = +5V VDISP = +5V

REV.	DESCRIPTION	BY	DATE	APPVD
	SEE SHEET 1			

UNLESS OTHERWISE SPECIFIED

511-0164

ARCO Temescal

DRAWN BY JULIE STEPHENS DATE 10/16/81 CHK BY KB SCALE NONE

VERSAVAC

CPU P.C. BOARD SCHEMATIC

511-017 SHEET 3 OF 8 REV 3

SHEET 3

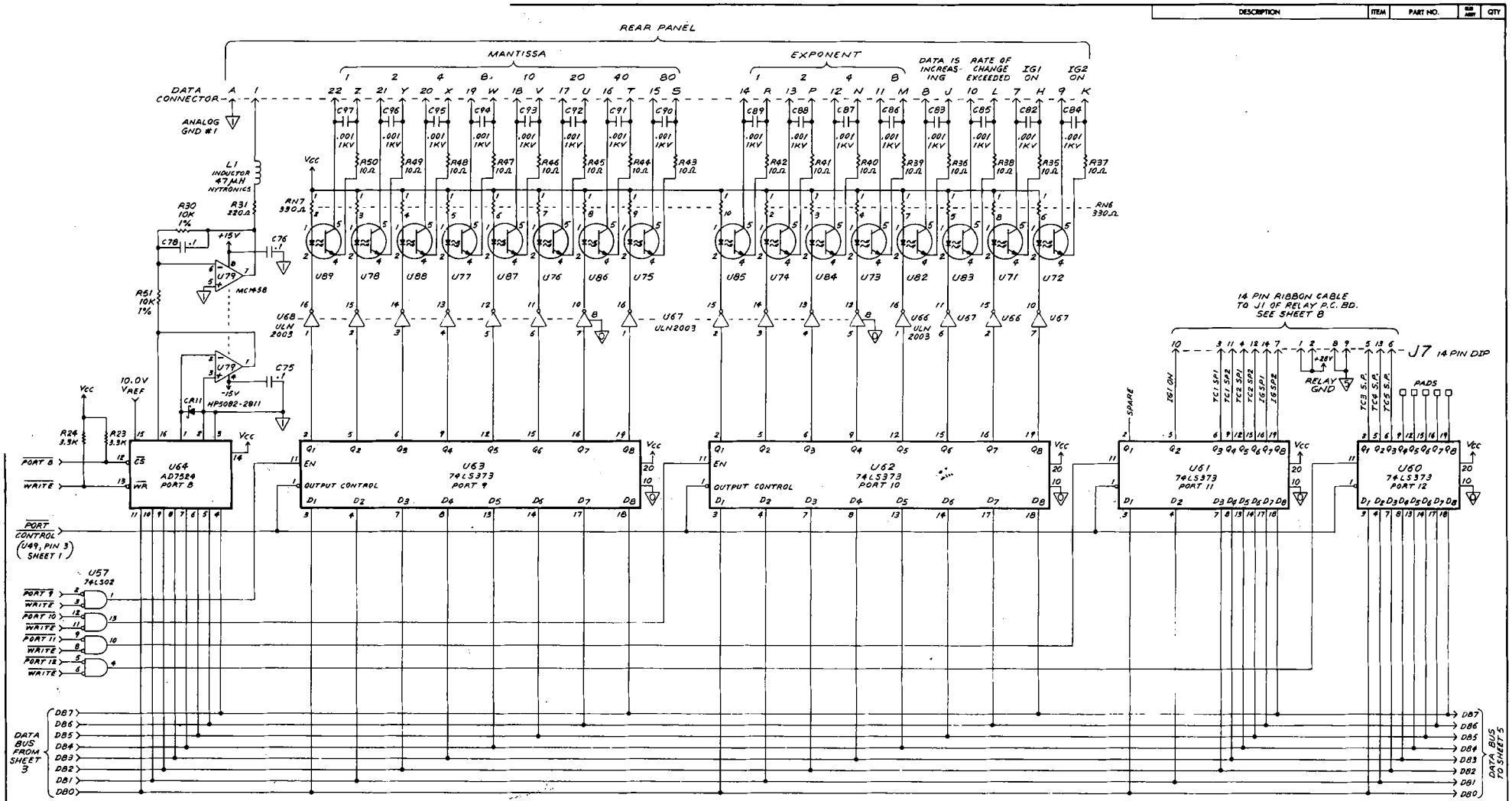

NOTES: UNLESS OTHERWISE SHOWN

1. REFERENCE DWGS:
   CPU P.C. BD. ASSY 511-0435
   VERSAVAC ASSY 511-0164
2. OPTO ISOLATORS ARE TIL111.
3. RESISTORS ARE 1/4 W, 5%.
4. LOGIC GND / ANALOG GND

SHEET 4

REV.	DESCRIPTION	BY	DATE	APP'VD
	SEE SHEET 1			

UNLESS OTHERWISE SPECIFIED

511-0164

AIRCO Temescal

DRAWN BY JULIE STEPHENS — DATE 10/16/81 — CHK BY KB — SCALE NONE

VERSAVAC

CPU P.C. BOARD SCHEMATIC

511-0174 SHEET 4 OF 8 — REV 3

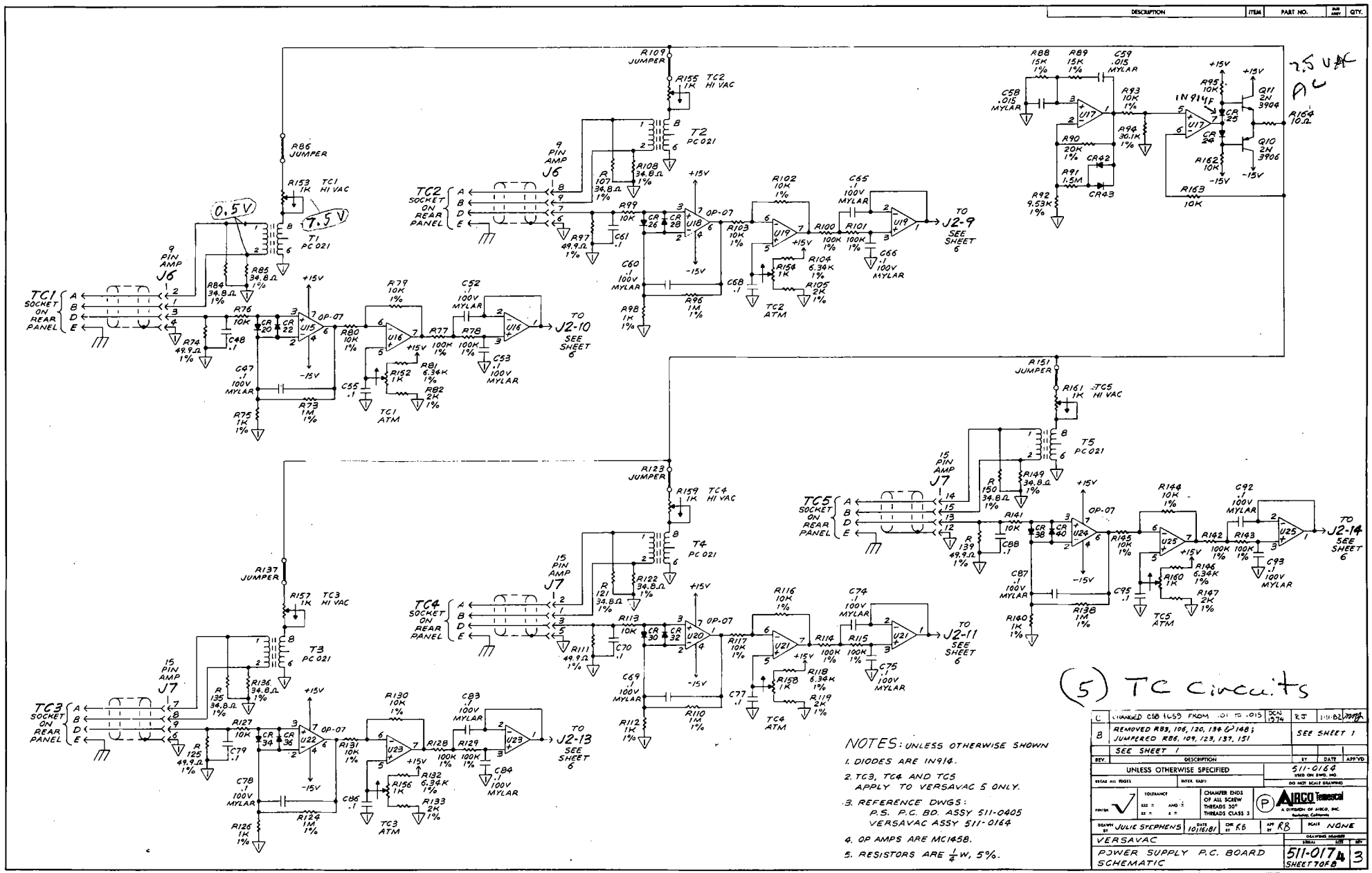

NOTES: UNLESS OTHERWISE SHOWN

1. DIODES ARE IN914.
2. TC3, TC4 AND TC5 APPLY TO VERSAVAC 5 ONLY.
3. REFERENCE DWGS: P.S. P.C. BD. ASSY 511-0405 VERSAVAC ASSY 511-0164
4. OP AMPS ARE MC1458.
5. RESISTORS ARE $\frac{1}{4}$ W, 5%.

REV.	DESCRIPTION	BY	DATE	APP'VD
C	CHANGED C58 (LS9) FROM .01 TO .015	DCN 1274	RJ	1-11-82
B	REMOVED R83, 106, 120, 134 & 148; JUMPERED R86, 109, 123, 137, 151	SEE SHEET 1		
	SEE SHEET 1			

UNLESS OTHERWISE SPECIFIED — BREAK ALL EDGES — ENTER. RADII — TOLERANCE — CHAMFER ENDS OF ALL SCREW THREADS 30° THREADS CLASS 2 — FINISH

511-0164 USED ON ENG. NO. — DO NOT SCALE DRAWING

AIRCO Temescal — A DIVISION OF AIRCO, INC. Berkeley, California

DRAWN BY JULIE STEPHENS — DATE 10/16/81 — CHK BY KB — APP BY RB — SCALE NONE

VERSAVAC

POWER SUPPLY P.C. BOARD SCHEMATIC

DRAWING NUMBER 511-0174 SHEET 7 OF 8 — REV 3

PARTS LIST NO. — APPLIES

-15V Out when Input is +5
0V Out when Input is LOW

Switches are energized at ØU Input

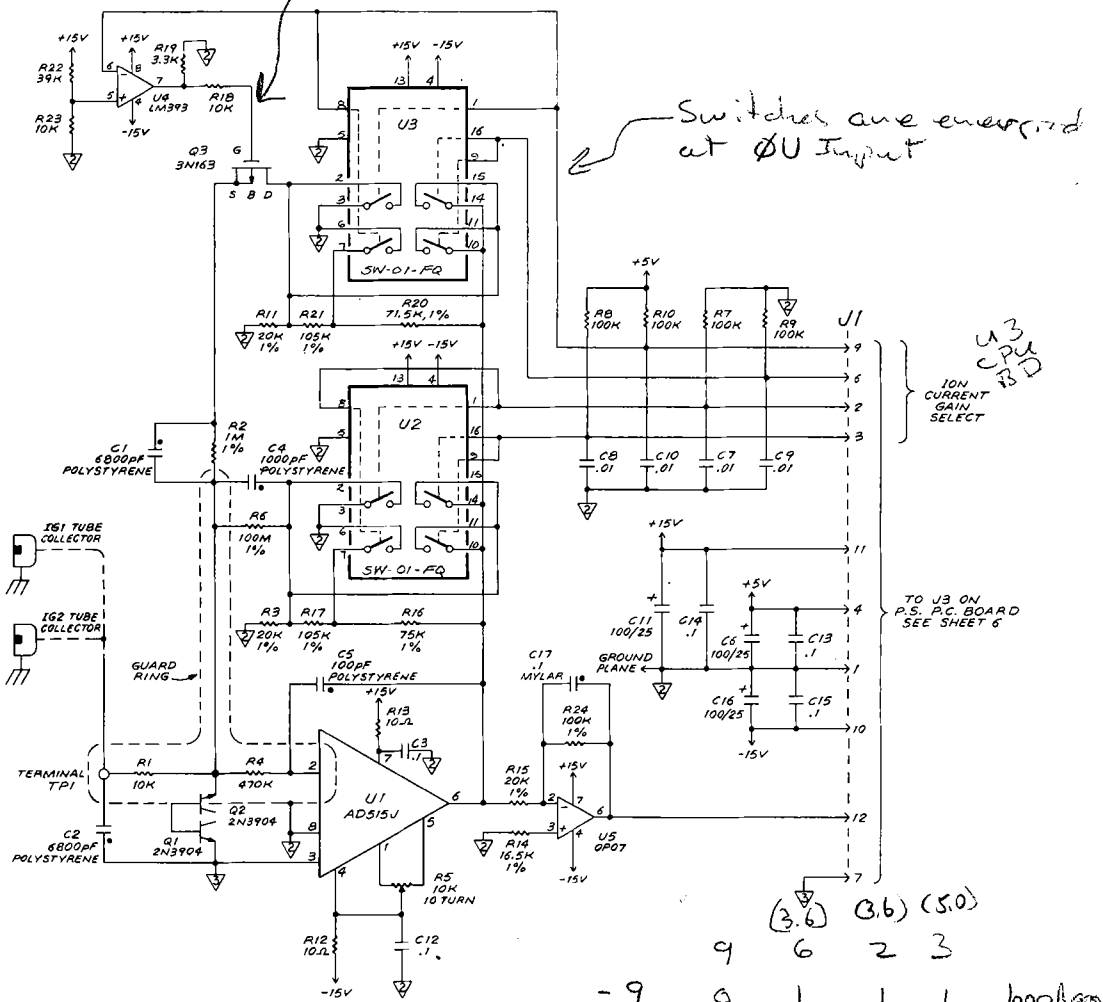

	9	6	2	3	
-9	0	1	1	1	1000 Meg
-8	0	1	1	0	100 Meg
-7	1	1	0	1	10 Meg
-6	1	0	0	1	1 Meg

ELECTROMETER P.C. BOARD

NOTES:
1. REFERENCE DWGS:
ELECTROMETER P.C. BD. ASSY 511-0313
VERSAVAC ASSY 511-0164

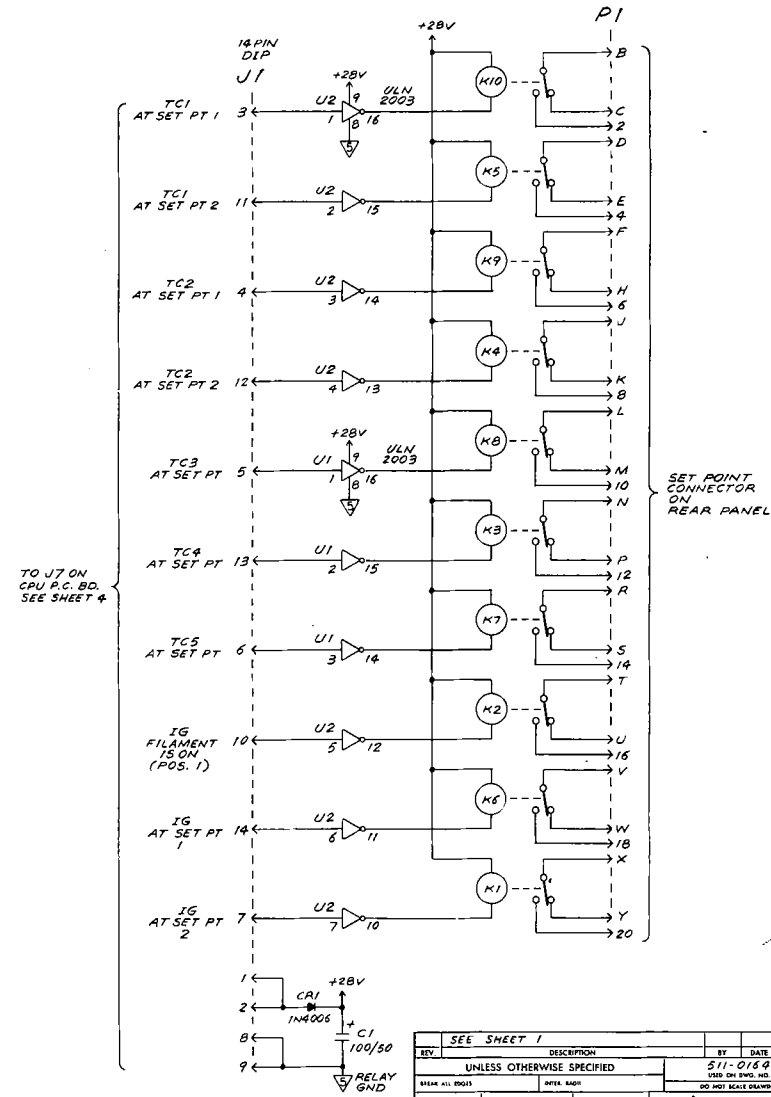

RELAY P.C. BOARD

NOTES:
1. REFERENCE DWGS:
RELAY P.C. BD. ASSY 511-0343
VERSAVAC ASSY 511-0164

DESCRIPTION	ITEM	PART NO.	SUB ASSY	QTY.

REV	DESCRIPTION	BY	DATE	APP'VD
	SEE SHEET 1			

UNLESS OTHERWISE SPECIFIED
BREAK ALL EDGES — ENTER. RADII
511-0164
USED ON DWG. NO.
DO NOT SCALE DRAWING
FINISH — TOLERANCES — CHAMFER ENDS OF ALL SCREW THREADS 30° THREADS CLASS 2
AIRCO Temescal — A DIVISION OF AIRCO, INC. Berkeley, California
DRAWN BY JULIE STEPHENS — DATE 10/16/81 — CHK BY RB — APP BY RB — SCALE NONE
VERSAVAC
ELECTROMETER P.C. BOARD AND RELAY P.C. BOARD SCHEMATICS
DRAWING NUMBER 511-0174 — SHEET 3 OF 8 — REV 3
PARTS LIST NO — APPLIES

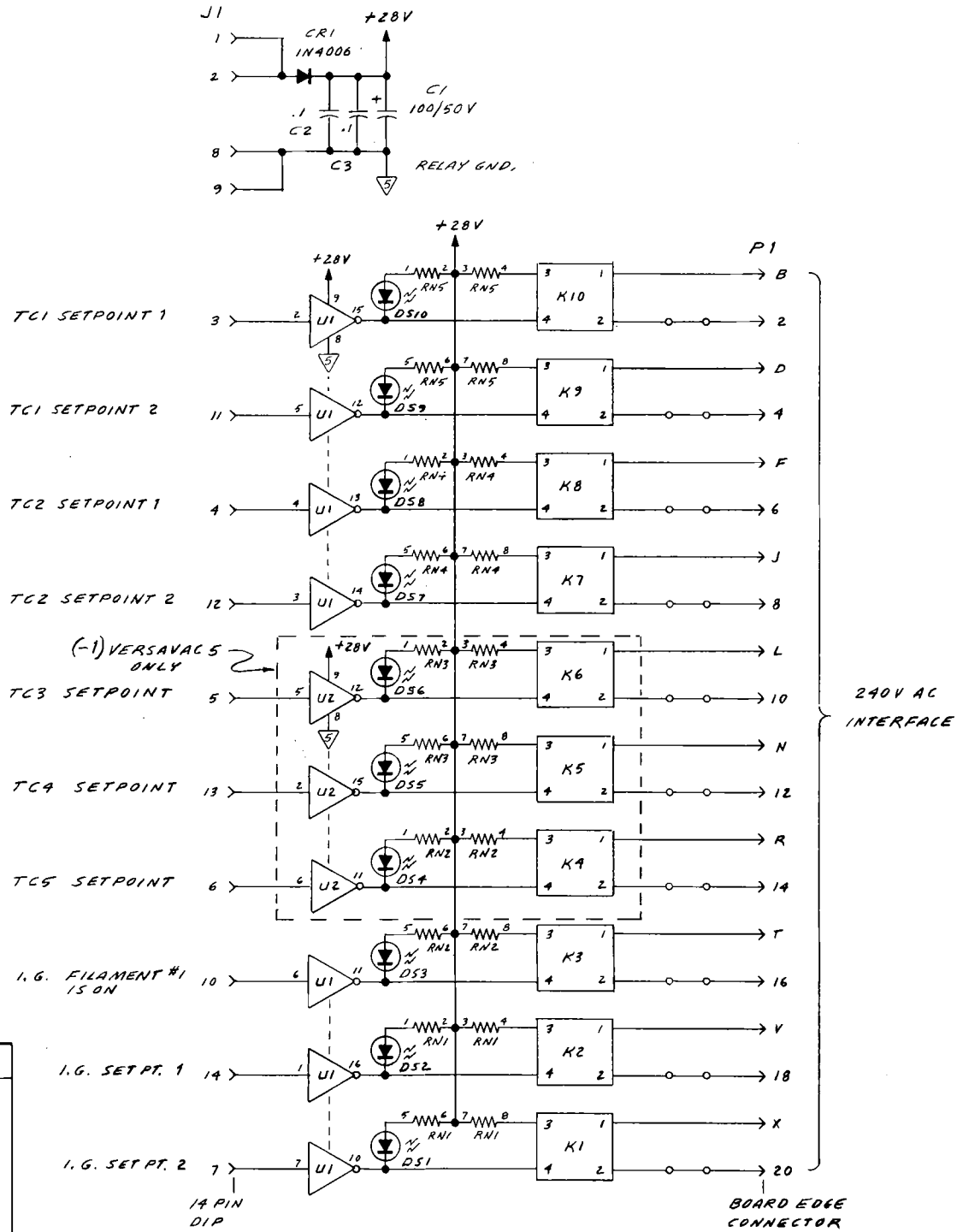

NOTES:

1. ALL RELAYS ARE OPTO 22 MP 240 D3 (SOLID STATE RELAY)
2. RESISTORS 2.2 K $\frac{1}{2}$ W PACK BECKMAN 784-3
3. LED'S H.P. # 5082-4684 (RED)

REV.	DESCRIPTION	BY	DATE	APP'VD

UNLESS OTHERWISE SPECIFIED

BREAK ALL EDGES — INTER. RADII — USED ON DWG. NO. — DO NOT SCALE DRAWING

TOLERANCE: .XX ± .XXX ± ANG ± X ±

FINISH

CHAMFER ENDS OF ALL SCREW THREADS 30° THREADS CLASS 2

AIRCO Temescal — A DIVISION OF AIRCO, INC. Berkeley, California

DRAWN BY: V. BURGETT — DATE: 1/27/82 — CHK BY: RB — APP BY: RB — SCALE: NL

VERSAVAC 2 & 5

SOLID STATE RELAY P.C.B.

SCHEMATIC

DRAWING NUMBER: 511-0243 — SIZE — REV.

PARTS LIST NO.

APPLIES

ITEM	PART NO.	DESCRIPTION	SUB ASSY	QTY.

DESCRIPTION	ITEM	PART NO.	SUB ASSY.	QTY.

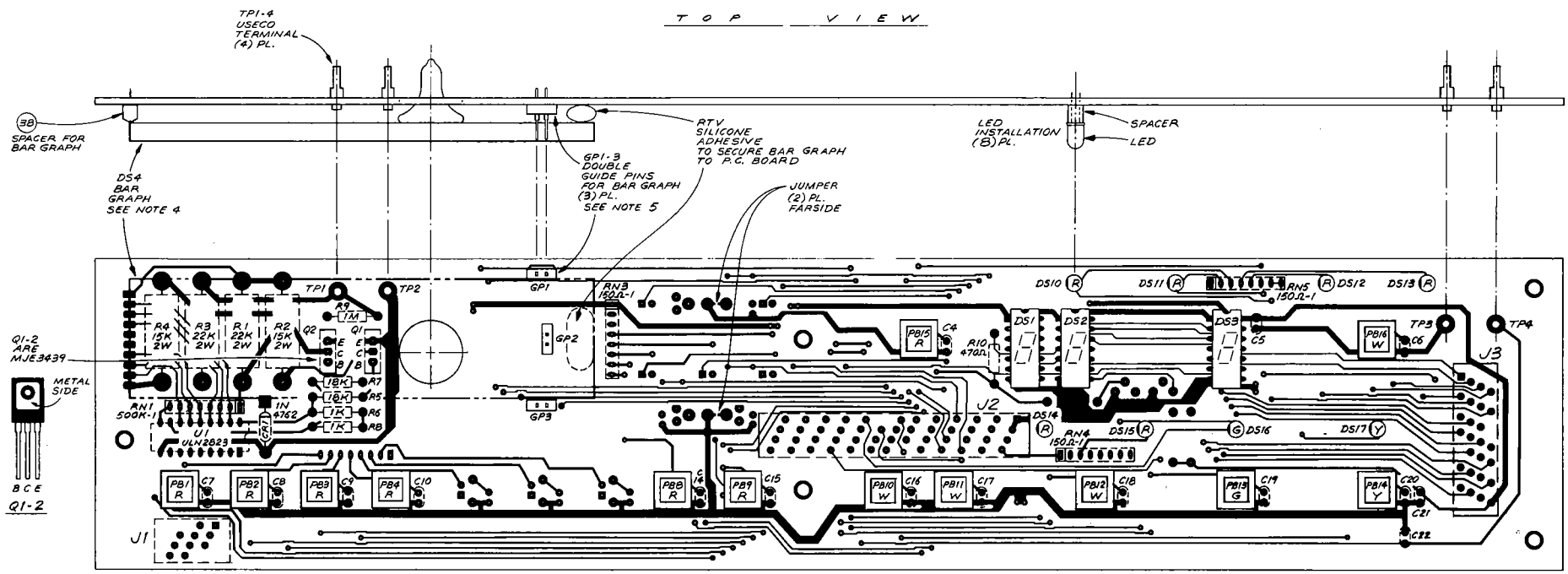

FRONT VIEW

-0

SEE SHEET 2 FOR VERSAVAC 5

NOTES: UNLESS OTHERWISE SHOWN

1. RESISTORS ARE ¼W, 5%.
2. CAPACITORS ARE .1 MF, 50V.
3. ALL SWITCHES, LEDS, DISPLAYS AND GUIDE PINS MOUNT ON FRONT SIDE; ALL OTHER COMPONENTS MOUNT ON FARSIDE.
4. BAR GRAPH (DS4) IS MOUNTED LAST OF ALL COMPONENTS.
5. GP1 AND GP3 MOUNT WITH LONGER PINS TOWARD FRONT SIDE; GP2 MOUNTS WITH LONGER PINS TOWARD FARSIDE.
6. SCHEMATIC REF. 511-0174.
7. USE HEATSHRINK TUBING TO COVER TP1 & TP2 (SEE REAR VIEW)

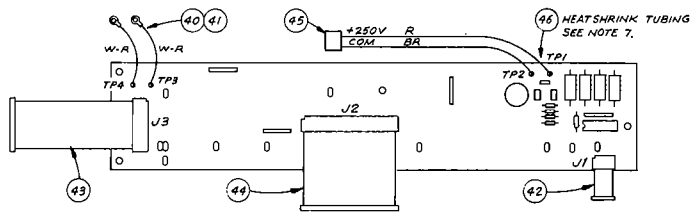

REAR VIEW

SCALE: NONE

REV.	DESCRIPTION	BY	DATE	APP'VD
D	ADDED BARGRAPH SPACER & HEATSHRINK TUBING	JS	4-29-82	RB
C	R1 & 3 WERE 20K; RN1 WAS 470K-3; ON -0 (SHEET 1)	JS	2-23-82	RB
B	ADDED PB4, C10 TO -0; DELETED RN2 ON -0 & -1	JS	10-26-81	RB
A	REVISED AND REDRAWN	JS	9-28-81	RB

UNLESS OTHERWISE SPECIFIED — 511-0164 USED ON DWG. NO.

BREAK ALL EDGES — INTER. RADII — DO NOT SCALE DRAWING

FINISH — TOLERANCE: .XX ± .03, .XXX ± .010, ANG. ± 1° — CHAMFER ENDS OF ALL SCREW THREADS 30° THREADS CLASS 2

AIRCO Temescal — A DIVISION OF AIRCO, INC. Berkeley, California

DRAWN BY V. BURGETT — DATE 11/26/80 — CHK BY RB — APP BY RB — SCALE 2:1 AND NOTED

VERSAVAC 2

DISPLAY P.C. BOARD ASSEMBLY

DRAWING NUMBER: 511-0284 SHEET 1 OF 2 — SIZE D

PARTS LIST NO. 0511-0284-0 APPLIES

DESCRIPTION	ITEM	PART NO.	SUB ASSY	QTY.

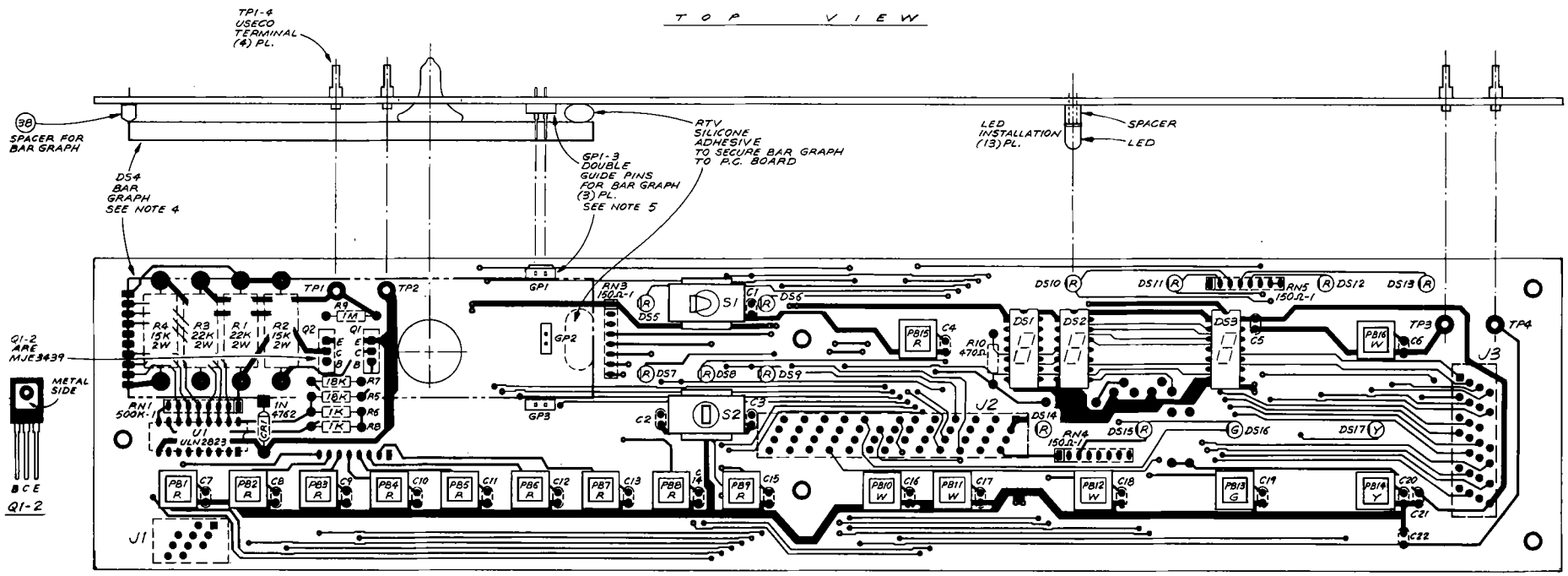

FRONT VIEW

-1

SEE SHEET 1 FOR VERSAVAC 2

NOTES: UNLESS OTHERWISE SHOWN

1. RESISTORS ARE ¼W, 5%.
2. CAPACITORS ARE .1 MF, 50V.
3. ALL SWITCHES, LEDS, DISPLAYS AND GUIDE PINS MOUNT ON FRONT SIDE; ALL OTHER COMPONENTS MOUNT ON FARSIDE.
4. BAR GRAPH (DS4) IS MOUNTED LAST OF ALL COMPONENTS.
5. GP1 AND GP3 MOUNT WITH LONGER PINS TOWARD FRONT SIDE; GP2 MOUNTS WITH LONGER PINS TOWARD FARSIDE.
6. SCHEMATIC REF. 511-0174.
7. USE HEATSHRINK TUBING TO COVER TP1 & TP2 (SEE REAR VIEW)

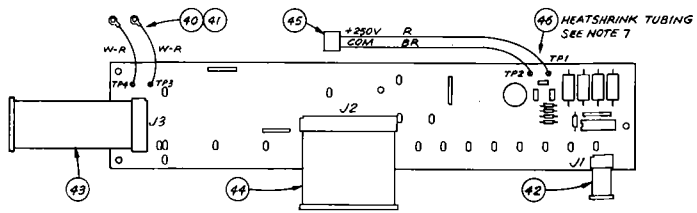

REAR VIEW

SCALE: NONE

REV.	SEE SHEET 1 DESCRIPTION	BY	DATE	APP'VD
UNLESS OTHERWISE SPECIFIED			511-0164	
BREAK ALL EDGES	MATL. BASIS			
FINISH	TOLERANCE	CHAMFER ENDS OF ALL SCREW THREADS 30° THREADS CLASS 2	ARCO Electronics A DIVISION OF ARCO, INC. Bellflower, California	
DRAWN BY V. BURGETT	DATE 11/20/80	CHK BY RB	APP BY RB	SCALE 2:1 AND METRIC
VERSAVAC 5				
DISPLAY P.C. BOARD ASSEMBLY			511-0284 SHEET 2 OF 2	D

PARTS LIST NO. 0511-0284-1

WARNING: MICRO FILM CHANGE CONTROL 1-6-82

DRAWING NO.	REV.	CHK. DATE	APPV. DATE	Tenescal PARTS LIST	1/3	TOTAL NO. OF UNITS	ENG. RELEASE BY - DATE	PROJ./WORK ORDER NO.
0511-0284-0	D							
DWG. TITLE DISPLAY PC BOARD ASSEMBLY							PLANNER - DATE	NEXT ASS'Y W/O NO.
JOB TITLE VERSA VAC 2				NEXT ASS'Y			ACCT. / PLANN. / STORES / STAGE / I.C. / OTHER	

DESCRIPTION	ITEM	PART/STOCK NO.	SUB	UNIT QUAN.	TOTAL REQ.	STORES ISS.	STORES CODE	DEC. FT.	P.O. NO. - VENDOR - DATE REMARKS - NOTES - MISC.
ASSEMBLY 511-0284	1						REF		Sheet 1
SCHEMATIC 511-0174	2						REF		
FABRICATION 511-0274	3	0511-0274-0		1					
ARTWORK 511-0264	4						REF		
	5								
	6								
IC ULN-2823	7	6844-2823-0		1					U1 SPRAGUE
DISPLAY TIL311	8	6844-7408-0		3					DS1-DS3-TEXAS INSTRUMENTS
BAR GRAPH	9	6106-3500-0		1					DS4 BURROUGHS BG-12205-2
TRANSISTOR MJE 3439	10	6823-3439-0		2					Q1, Q2 MOTOROLA
	11								
DIODE, ZENER 1N4762	12	6814-4762-0		1					CR1 MOTOROLA
LED RED HP	13	6160-4655-0		6					DS10 - DS15
LED GREEN HP	14	6160-4955-0		1					DS16
LED YELLOW HP	15	6160-4555-0		1					DS17
SPACER BIVAR #905-220	16	6040-0220-0		8					LED SPACERS

DRAWING NO.	REV.	CHK. DATE	APPV. DATE	AIRCO Temescal PARTS LIST	2/3	TOTAL NO. OF UNITS	ENG. RELEASE BY - DATE	PROJ./WORK ORDER NO.
0511-0284-0	D							
DWG. TITLE DISPLAY PC BOARD ASSEMBLY							PLANNER - DATE	NEXT ASS'Y W/O NO.
JOB TITLE VERSA VAC 2				NEXT ASS'Y			ACCT. / PLANN. / STORES / STAGE / I.C. / OTHER	

DESCRIPTION	ITEM	PART/STOCK NO.	SUB	UNIT QUAN.	TOTAL REQ.	STORES ISS.	STORES CODE	DEC. FT.	P.O. NO. - VENDOR - DATE REMARKS - NOTES - MISC.
IC SOCKET 14 PINS	17	6844-9314-0		3					DS1 - DS3
	18								
USECO TERMINALS 1309	19	6047-3625-0		4					TP1 - TP4
RESISTOR 470 OHM 1/4W	20	6404-4610-0		1					R10
RESISTOR 1K 1/4W	21	6404-4623-0		2					R6, R8
RESISTOR 18K 1/4W	22	6404-4660-0		2					R5, R7
	23								
RESISTOR 1M 1/4W	24	6404-4725-0		1					R9
RESISTOR 15K 2W	25	6407-4658-0		2					R2, R4
RESISTOR 22K 2W	26	6407-4662-0		2					R3, R1
RESISTOR PACK 150 OHM MSP08C01-151G	27	6400-0150-0		3					RN3-RN5 DALE 150 OHM -1
RESISTOR PACK 500K MSP08C01-504G	28	6400-0500-0		1					RN1 DALE 500K-1
	29								
CAPACITOR 0.1 µf MONO 50V	30	6960-0030-0		16					C4 - C10, C14 - C22
	31								
	32								

DRAWING NO.	REV.	CHK. DATE	APPV. DATE	AIRCO Temescal PARTS LIST	3/3	TOTAL NO. OF UNITS	ENG. RELEASE BY - DATE	PROJ./WORK ORDER NO.
0511-0284-0	D							
DWG. TITLE DISPLAY PC BOARD							PLANNER - DATE	NEXT ASS'Y W/O NO.
JOB TITLE VERSA VAC 2				NEXT ASS'Y			ACCT. / PLANN. / STORES / STAGE / I.C. / OTHER	

DESCRIPTION	ITEM	PART/STOCK NO.	SUB	UNIT QUAN.	TOTAL REQ.	STORES ISS.	STORES CODE	DEC. FT.	P.O. NO. - VENDOR - DATE REMARKS - NOTES - MISC.
SWITCH PB RED MOMENTARY	33	6156-2211-0		8					LICON 39-12211
SWITCH PB GREEN MOMENTARY	34	6156-2504-0		1					PB13 LICON 39-12504
SWITCH PB YELLOW MOMENTARY	35	6156-2506-0		1					PB14 LICON 39-12506
SWITCH PB WHITE MOMENTARY	36	6156-2502-0		4					PB12, PB16 LICON 39-12502
	37								
CONN. BLOCK 8 PIN MOLEX	38	6047-6975-0		I					D
HEADER - GUIDE PIN	39	6047-7224-0		3					87224-2 AMP GP1 - GP3
LUG RING - RED	40	6044-0733-0		2					
WIRE 20 GA WHITE-RED	41	6338-5021-2		1					
CABLE ASSEMBLY 10 PT	42	0511-8312-0	X	1					J1
CABLE ASSEMBLY 26 PT	43	0511-8332-0	X	1					J3
CABLE ASSEMBLY 50 PT	44	0511-8342-0	X	1					J2
CABLE ASSEMBLY 2 PT	45	0511-8501-0	X	1					
HEAT SHRINK TUBING I/8"	46	6348-60I2-0		.I5'					D

WARNING: MICRO FILM CHANGE CONTROL 1-5-82

DRAWING NO.	REV.	CHK. DATE	APPV. DATE	AMCO Temescal ③ PARTS LIST	1/3	TOTAL NO. OF UNITS	ENG. RELEASE BY - DATE	PROJ./WORK ORDER NO.
0511-0284-1	D							
DWG. TITLE DISPLAY PC BOARD ASSEMBLY							PLANNER - DATE	NEXT ASS'Y W/O NO.
JOB TITLE VERSA VAC 5				NEXT ASS'Y			ACCT. / PLANN. / STORES / STAGE / I.C. / OTHER	

DESCRIPTION	ITEM	PART/STOCK NO.	SUB	UNIT QUAN.	TOTAL REQ.	STORES ISS.	STORES CODE	DEC. FT.	P.O. NO. - VENDOR - DATE REMARKS - NOTES - MISC.
ASSEMBLY 511-0284	1						REF		SHEET 2
SCHEMATIC 511-0174	2						REF		
FABRICATION 511-0274	3	0511-0274-0		1					
ARTWORK 511-0264	4						REF		
	5								
	6								
IC ULN-2823	7	6844-2823-0		1					U1 SPRAGUE
DISPLAY TIL-311	8	6844-7408-0		3					DS1-DS3 TEXAS INSTRUMENTS
DISPLAY BAR GRAPH	9	6106-3500-0		1					DS4 BURROUGHS BG-12205-2
TRANSISTOR MJE 3439	10	6823-3439-0		2					Q1, Q2 MOTOROLA
	11								
DIODE, ZENER 1N4762	12	6814-4762-0		1					CR1 MOTOROLA
LED RED H-P	13	6160-4655-0		11					DS5 - DS15
LED GREEN H-P	14	6160-4955-0		1					DS16
LED YELLOW H-P	15	6160-4555-0		1					DS17
SPACER BIVAR #905-220	16	6040-0220-0		13					LED SPACERS

DRAWING NO.	REV.	CHK. DATE	APPV. DATE	AMPEX Temescal **PARTS LIST**	2/3	TOTAL NO. OF UNITS	ENG. RELEASE BY - DATE	PROJ./WORK ORDER NO.
0511-0284-1	D							
DWG. TITLE DISPLAY PC BOARD							PLANNER - DATE	NEXT ASS'Y W/O NO.
JOB TITLE VERSA VAC 5				NEXT ASS'Y			ACCT. / PLANN. / STORES / STAGE / I.C. / OTHER	

DESCRIPTION	ITEM	PART/STOCK NO.	SUB	UNIT QUAN.	TOTAL REQ.	STORES ISS.	STORES CODE	DEC. FT.	P.O. NO. - VENDOR - DATE REMARKS - NOTES - MISC.
IC SOCKET 14 PT	17	6844-9314-0		3					DS1 - DS3
	18								D
USECO TERMINAL 1309	19	6047-3625-0		4					TP1 - TP4
RESISTOR 470 OHM 1/4 W	20	6404-4610-0		1					R10
RESISTOR 1K 1/4 W	21	6404-4623-0		2					R6, R8
RESISTOR 18K 1/4 W	22	6404-4660-0		2					R5, R7
	23								
RESISTOR 1M 1/4W	24	6404-4725-0		1					R9
RESISTOR 15K 2W	25	6407-4658-0		2					R2, R4
RESISTOR 22K 2W	26	6407-4662-0		2					R3, R1
RESISTOR PACK 150 OHM MSP08C01-151G	27	6400-0150-0		3					RN3-RN5 DALE 150 -1
RESISTOR PACK 500K MSP08C01-504G	28	6400-0500-0		1					RN1 DALE 500K-1
	29								
CAPACITOR 0.1 µf 50V	30	6960-0030-0		22					C1 - C22 D
SWITCH, TOGGLE, SPDT	31	6156-7101-0		1					S1, C&K 7101-MD9-V30-Q
SWITCH, TOGGLE, SPDT CENTER OFF	32	6156-7103-0		1					S2, C&K 7103-MD9-V30-Q

DRAWING NO.	REV.	CHK. DATE	APPV. DATE	AIRCO Temescal PARTS LIST	3/3	TOTAL NO. OF UNITS	ENG. RELEASE BY - DATE	PROJ./WORK ORDER NO.
0511-0284-1	D							
DWG. TITLE DISPLAY PC BOARD							PLANNER - DATE	NEXT ASS'Y W/O NO.
JOB TITLE VERSA VAC 5				NEXT ASS'Y			ACCT. / PLANN. / STORES / STAGE / I.C. / OTHER	

DESCRIPTION	ITEM	PART/STOCK NO.	SUB	UNIT QUAN.	TOTAL REQ.	STORES ISS.	STORES CODE	DEC. FT.	P.O. NO. - VENDOR - DATE REMARKS - NOTES - MISC.
SWITCH PB RED MOMENTARY	33	6156-2211-0		10					PB1-9, PB15, LICON 39-12211
SWITCH PB GREEN MOMENTARY	34	6156-2504-0		1					PB13 LICON 39-12504
SWITCH PB YELLOW MOMENTARY	35	6156-2506-0		1					PB14 LICON 39-12506
SWITCH PB WHITE MOMENTARY	36	6156-2502-0		4					PB10-12, PB16 LICON 39-12502
	37								
CONN. BLOCK 8 PIN MOLEX	38	6047-6975-0		1					D
HEADER - GUIDE PIN	39	6047-7224-0		3					GP1 - GP3 87224-2 AMP
LUG RING RED	40	6044-0733-0		2					FOR KEYLOCK
WIRE 20 GA W-R	41	6338-5021-2		1'					
CABLE ASSEMBLY 10 PT	42	0511-8312-0	X	1					J1
CABLE ASSEMBLY 26 PT	43	0511-8332-0	X	1					J3
CABLE ASSEMBLY 50 PT	44	0511-8342-0	X	1					J2
CABLE ASSEMBLY 2 PT AMP	45	0511-8501-0	X	1					
HEATSHRINK TUBING 1/8"	46	6348-6012-0		.15'					D

DESCRIPTION	ITEM	PART NO.	SUB ASSY	QTY.

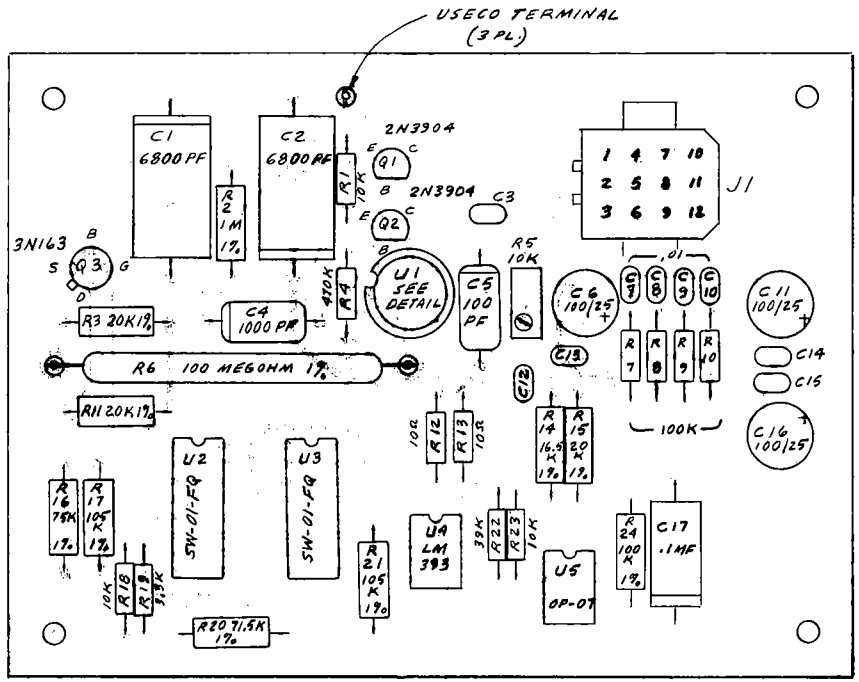

NOTES: (UNLESS OTHERWISE SHOWN.)

1. CAPS ARE .1 MF.
2. RESISTORS $\frac{1}{4}$ W 5%
3. SCHEMATIC REF: 511-0174

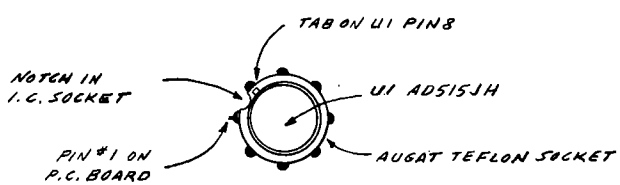

U1 DETAIL

TOP VIEW

REV.	DESCRIPTION	BY	DATE	APP'VD
1	U2 & U3 WAS HI 1800 A DCN #10185	VCB	8-11-83	RB
B	C6 WAS 100/16	J.S.	4-29-82	R.B.
A	.1 CAPS WERE LARGER SIZE (5 PL)	J.S.	4-29-81	R.B.

UNLESS OTHERWISE SPECIFIED

BREAK ALL EDGES | INTER. RADII

511-0164 USED ON DWG. NO.

DO NOT SCALE DRAWING

FINISH √

TOLERANCE: XXX ± ANG ± XX ± X ±

CHAMFER ENDS OF ALL SCREW THREADS 30° THREADS CLASS 2

AIRCO Temescal — A DIVISION OF AIRCO, INC. Berkeley, California

DRAWN BY V. BURGETT | DATE 8/11/83 | CHK BY | APP BY | SCALE 2X

VERSAVAC ELECTROMETER P.C. BOARD ASSEMBLY

DRAWING NUMBER: SERIAL 511-031 | SIZE 3 | REV 1

PARTS LIST NO. 0511-0313-0 APPLIES

DRAWING NO.	REV.	CHK. DATE	APPV. DATE	AIRCO Temescal PARTS LIST	1/3	TOTAL NO. OF UNITS	ENG. RELEASE BY - DATE	PROJ./WORK ORDER NO.
0511-0313-0	1							
DWG. TITLE ELECTROMETER PC BOARD ASS'Y							PLANNER - DATE	NEXT ASS'Y W/O NO.
JOB TITLE VERSA VAC				NEXT ASS'Y			ACCT. / PLANN. / STORES / STAGE / I.C. / OTHER	

DESCRIPTION	ITEM	PART/STOCK NO.	SUB	UNIT QUAN.	TOTAL REQ.	STORES ISS.	STORES CODE	DEC. FT.	P.O. NO. - VENDOR - DATE REMARKS - NOTES - MISC.
ASSEMBLY 511-0313	1						REF		
SCHEMATIC 511-0174	2						REF		
PC BOARD FAB 511-0303	3	0511-0303-0		1					
ARTWORK 511-0293	4						REF		
	5								
	6								
	7								
	8								
AD-515JH IC	9	6844-0515-0		1					U1 ANALOG DEVICES
SW-01-FQ	10	6844-0023-10		2					U2, U3 PMI
LM393N	11	6844-0393-0		1					U4 B
OP-07EP	12	6844-8207-0		1					U5 PRECISION MONOLITHIC
2N3904 TRANSISTOR	13	6823-9040-0		2					Q1, Q2
3N163	14	6844-0163-0		1					Q3 SILICONIX
IC SOCKET 8 PIN TEFLON	15	6844-9328-0		1					AUGAT 8058 -39G4, Item 9
	16								B
	17								B

430-3

DRAWING NO.	REV.	CHK. DATE	APPV. DATE	AIRCO Temescal PARTS LIST	2/3	TOTAL NO. OF UNITS	ENG. RELEASE BY - DATE	PROJ./WORK ORDER NO.
0511-0313-0	1							
DWG. TITLE ELECTROMETER PC BOARD ASS'Y							PLANNER - DATE	NEXT ASS'Y W/O NO.
JOB TITLE VERSA VAC				NEXT ASS'Y			ACCT. / PLANN. / STORES / STAGE / I.C. / OTHER	

DESCRIPTION	ITEM	PART/STOCK NO.	SUB	UNIT QUAN.	TOTAL REQ.	STORES ISS.	STORES CODE	DEC. FT.	P.O. NO. - VENDOR - DATE REMARKS - NOTES - MISC.
	18								
10 OHM 1/4W 5%	19	6404-4560-0		2					R12, R13
3.3K OHM 1/4W 5%	20	6404-4637-0		1					R19
10K OHM 1/4W 5%	21	6404-4654-0		3					R1, R18, R23
39K OHM 1/4W 5%	22	6404-4670-0		1					R22
100K OHM 1/4W 5%	23	6404-4690-0		4					R7 - R10
470K OHM 1/4W 5%	24	6404-4712-0		1					R4
	25								
	26								
16.5K 1% RN60D	27	6448-1524-0		1					R14
20K 1% RN60D	28	6448-5160-0		3					R3, R11, R15
71.5K 1% RN60D	29	6448-5565-0		1					R20
75.0K 1% RN60D	30	6448-5567-0		1					R16
100K 1% RN60D	31	6405-4197-0		1					R24
105K 1% RN60D	32	6448-5575-0		2					R17, R21
1M 1% RN60D	33	6448-5610-0		1					R2
	34								

DRAWING NO.	REV.	CHK. DATE	APPV. DATE	AIRCO Temescal PARTS LIST	3/3	TOTAL NO. OF UNITS	ENG. RELEASE BY - DATE	PROJ./WORK ORDER NO.
0511-0313-0	1							
DWG. TITLE ELECTROMETER PC BOARD							PLANNER - DATE	NEXT ASS'Y W/O NO.
JOB TITLE VERSA VAC				NEXT ASS'Y			ACCT. / PLANN. / STORES / STAGE / I.C. / OTHER	

DESCRIPTION	ITEM	PART/STOCK NO.	SUB	UNIT QUAN.	TOTAL REQ.	STORES ISS.	STORES CODE	DEC. FT.	P.O. NO. - VENDOR - DATE REMARKS - NOTES - MISC.
100M 1%	35	6448-5612-0		1					R6, Victoreen RX-1-100 Megohm
	36								
TRIMPOT 10K 66WR10K	37	6046-7266-0		1					R5
	38								
CAPACITOR 100 pf POLYSTYRENE	39	6503-0315-0		1					C5 Mallory SXM310
CAPACITOR 1000 pf POLYSTYRENE	40	6503-0330-0		1					C4 Mallory SXM210
CAPACITOR 6800 pf POLYSTYRENE	41	6503-0331-0		2					C1, C2 Mallory SX268
CAPACITOR 0.01 µf 50V MONO	42	6960-0028-0		4					C7 - C10
CAPACITOR 0.1 µf 50V MONO	43	6960-0030-0		5					C12 - C15, C3
CAPACITOR 100 µf 25V	44	6505-0116-3		3					C6, C11, C16 B
	45								B
CAPACITOR 0.1 µf 200V MYLAR	46	6517-1933-0		1					C17
USECO TERMINAL 1310D1	47	6047-3628-0		3					
CONNECTOR 12 PT	48	6047-0012-1		1					AMP 9-350264-1 J1
	49								
	50								
	51								

DESCRIPTION	ITEM	PART NO.	SUB ASSY	QTY.

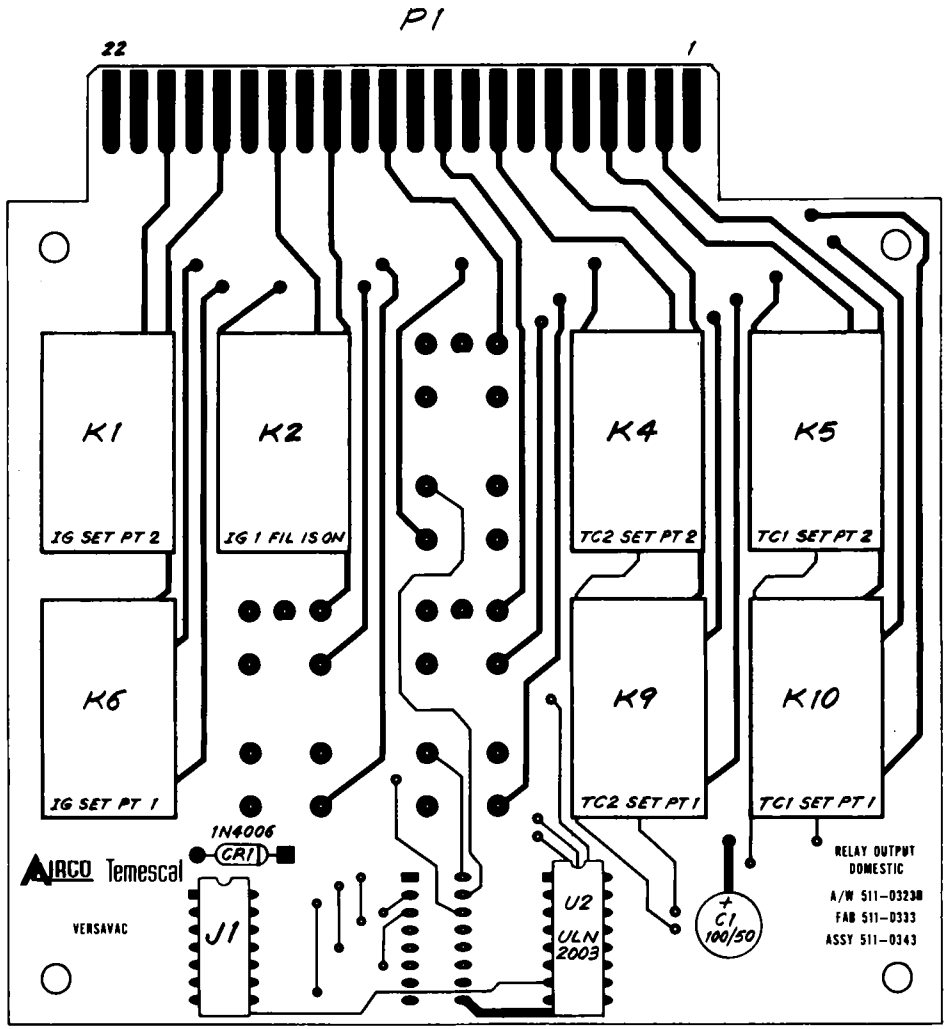

-0

NOTES:

1. RELAYS ARE AMERICAN-ZETTLER AZ7-2C-24DE OR AROMAT NF2EB-24V.
2. SCHEMATIC REF. 511-0174.

REV.	DESCRIPTION	BY	DATE	APP'VD
C	TO MATCH PARTS LIST	VGB	7-19-82	RB
B	ADDED K4	JS	10-28-81	RB
A	REVISED AND REDRAWN	JS	10-5-81	RB

UNLESS OTHERWISE SPECIFIED
BREAK ALL EDGES | INTER. RADII
511-0164 USED ON DWG. NO.
DO NOT SCALE DRAWING

FINISH √ | TOLERANCE .XXX ± .XX ± ANG ± X ± | CHAMFER ENDS OF ALL SCREW THREADS 30° THREADS CLASS 2 | (2) AIRCO Temescal A DIVISION OF AIRCO, INC. Berkeley, California

DRAWN BY V. BURGETT | DATE 11/26/80 | CHK BY RB | APP BY RB | SCALE 2:1

VERSAVAC 2

RELAY OUTPUT P.C. BOARD ASSEMBLY (DOMESTIC)

DRAWING NUMBER: SERIAL 511-0343 SIZE | REV C
SHEET 1 OF 2

PARTS LIST NO. 0511-0343-0 APPLIES

SEE SHEET 2 FOR VERSAVAC 5

DESCRIPTION	ITEM	PART NO.	SUB ASSY	QTY.

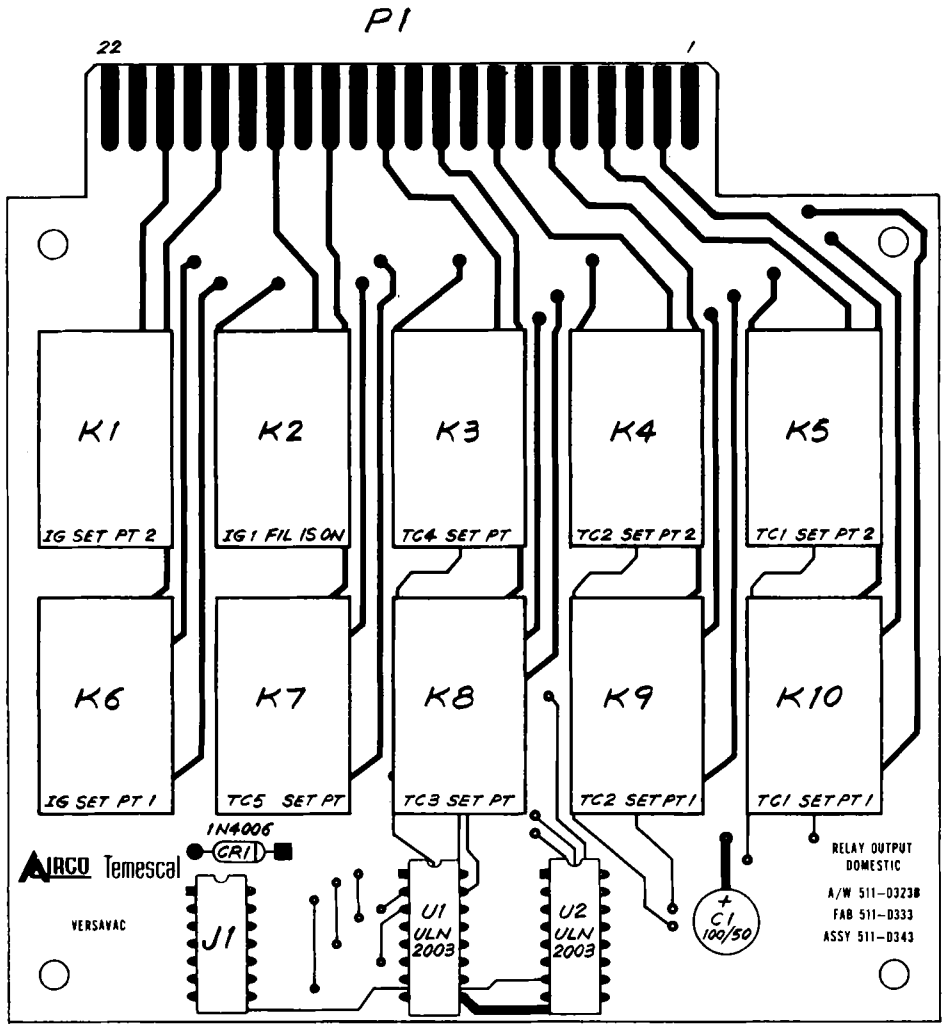

NOTES:

1. RELAYS ARE AMERICAN-ZETTLER AZ7-2C-24DE OR AROMAT NF2EB-24V.
2. SCHEMATIC REF. 511-0174.

-1

SEE SHEET 1 FOR VERSAVAC 2

	SEE SHEET 1			
REV.	DESCRIPTION	BY	DATE	APP'VD

UNLESS OTHERWISE SPECIFIED

BREAK ALL EDGES | INTER. RADII

511-0164 USED ON DWG. NO.

DO NOT SCALE DRAWING

FINISH √ | TOLERANCE XXX ± ANG ± XX ± X ± | CHAMFER ENDS OF ALL SCREW THREADS 30° THREADS CLASS 2 | (2) AIRCO Temescal A DIVISION OF AIRCO, INC. Berkeley, California

DRAWN BY V. BURGETT | DATE 11/26/80 | CHK BY RB | APP BY RB | SCALE 2:1

VERSAVAC 5

RELAY OUTPUT P.C. BOARD ASSEMBLY (DOMESTIC)

DRAWING NUMBER: SERIAL 511-0343 SHEET 2 OF 2 | SIZE C | REV

PARTS LIST NO. 0511-0343-1 APPLIES

WARNING: [illegible] CONTROL
1-5-82

DRAWING NO.	REV.	CHK. DATE	APPV. DATE	AIRCO Temescal PARTS LIST	1/1	TOTAL NO. OF UNITS	ENG. RELEASE BY - DATE	PROJ./WORK ORDER NO.
0511-0343-0	C							
DWG. TITLE RELAY PC BOARD - DOMESTIC							PLANNER - DATE	NEXT ASS'Y W/O NO.
JOB TITLE VERSA VAC 2				NEXT ASS'Y			ACCT. / PLANN. / STORES / STAGE / I.C. / OTHER	

DESCRIPTION	ITEM	PART/STOCK NO.	SUB	UNIT QUAN.	TOTAL REQ.	STORES ISS.	STORES CODE	DEC. FT.	P.O. NO. - VENDOR - DATE REMARKS - NOTES - MISC.
SCHEMATIC 511-0174	1						REF		
ARTWORK 511-0323	2						REF		
FABRICATION 511-0333	3	0511-0333-0		1					
ASSEMBLY 511-0343-0	4						REF		Sheet 1
	5								
	6								
IC ULN 2003 SPRAGUE	7	6844-2003-0		1					U2
DIODE 1N4006	8	6838-9410-0		1					CR1
	9								C
IC SOCKET 14 PT WITH RETAINER	10	6844-9314-1		1					J1 C
CAPACITOR 100 μf W 50V	11	6505-0116-1		1					C1
	12								
	13								
B RELAY AROMAT NF2EB-24V or AMER. ZETT. AZ7-2C-24DE	14	6041-0424-0		7					K1, K2, K5, K6, K9, K10, K4

WARNING: [illegible] CONTROL 1-5-86

DRAWING NO.	REV.	CHK. DATE	APPV. DATE	AMCO Temescal ③ PARTS LIST	1/1	TOTAL NO. OF UNITS	ENG. RELEASE BY - DATE	PROJ./WORK ORDER NO.
0511-0343-1	C							
DWG. TITLE RELAY PC BOARD - DOMESTIC							PLANNER - DATE	NEXT ASS'Y W/O NO.
JOB TITLE VERSA VAC 5				NEXT ASS'Y			ACCT. / PLANN. / STORES / STAGE / I.C. / OTHER	

DESCRIPTION	ITEM	PART/STOCK NO.	SUB	UNIT QUAN.	TOTAL REQ.	STORES ISS.	STORES CODE	DEC. FT.	P.O. NO. - VENDOR - DATE REMARKS - NOTES - MISC.
SCHEMATIC 511-0174	1						REF		
ARTWORK 511-0323	2						REF		
FABRICATION 511-0333	3	0511-0333-0		1					
ASSEMBLY 511-0343-1	4						REF		Sheet 2
	5								
	6								
IC ULN 2003 SPRAGUE	7	6844-2003-0		2					U1, U2
DIODE 1N4006	8	6838-9410-0		1					CR1
	9								
IC SOCKET 14 PT **WITH RETAINER**	10	6844-9314-I		1					J1 △
CAPACITOR 100 µf 50V	11	6505-0116-1		1					C1
	12								
	13								
△ RELAY AROMAT NF2EB-24V or AMER.ZETT. AZ7-2C-24DE	14	6041-0424-0		10					K1 - K10

DESCRIPTION	ITEM	PART NO.	SUB ASSY	QTY.

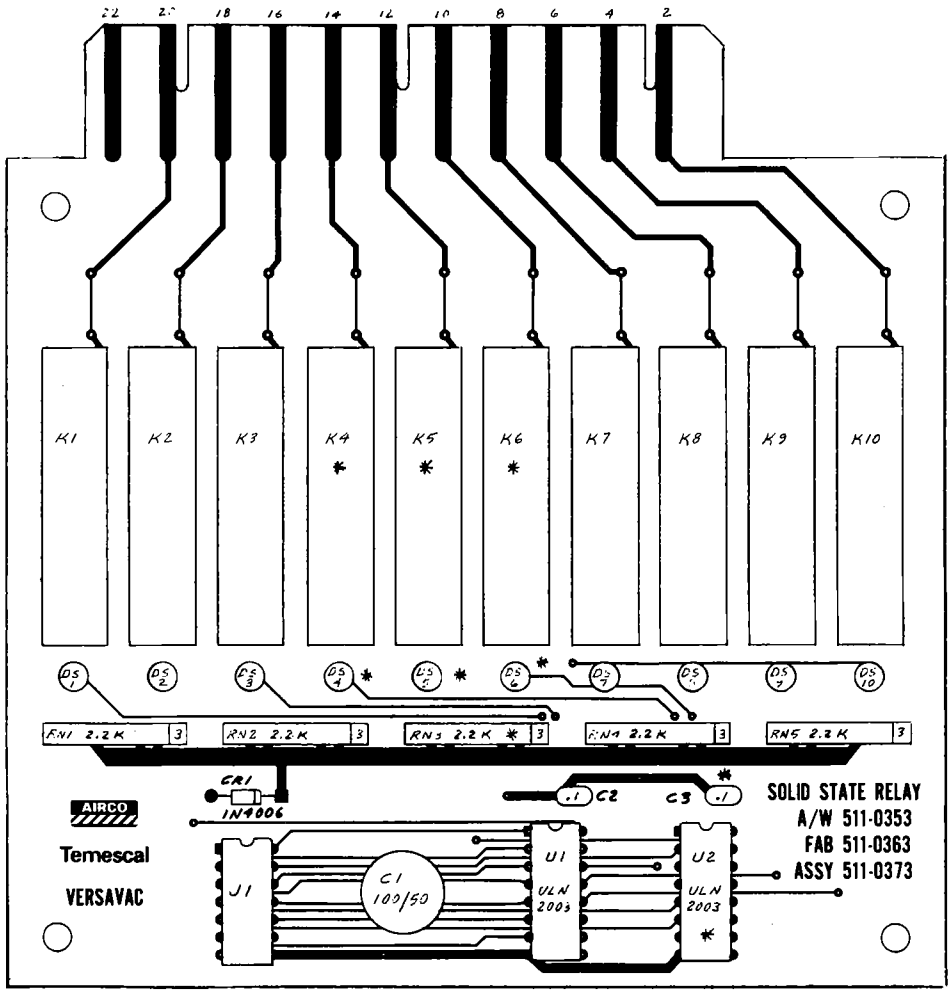

FOR SCHEMATIC SEE 511-0243

DASH-0	LESS COMPONENTS *
DASH-1	ALL COMPONENTS SHOWN

REV.	DESCRIPTION	BY	DATE	APP'VD
A	TO MATCH PARTS LIST	VGB	7/16-82	

UNLESS OTHERWISE SPECIFIED

BREAK ALL EDGES | INTER. RADII | USED ON DWG. NO. | DO NOT SCALE DRAWING

FINISH √ | TOLERANCE XXX ± ANG ± XX ± X ± | CHAMFER ENDS OF ALL SCREW THREADS 30° THREADS CLASS 2

AIRCO Temescal
A DIVISION OF AIRCO, INC.
Berkeley, California

DRAWN BY V. BURGETT | DATE 2/11/82 | CHK BY RB | APP BY RB | SCALE 2X

VERSAVAC 2 & 5
SOLID STATE RELAY P.C. BOARD
ASSEMBLY

DRAWING NUMBER: SERIAL | SIZE | REV
511-0373 | A

PARTS LISY NO. 0511-0373-0 APPLIES

WARNING: ALSO FILL CHANGE CONTROL

DRAWING NO.	REV.	CHK. DATE	APPV. DATE	ABCO Temescal ② PARTS LIST	1/1	TOTAL NO. OF UNITS	ENG. RELEASE BY - DATE	PROJ./WORK ORDER NO.
0511-0373-0	A							
DWG. TITLE: SOLID STATE RELAY PC ASSEMBLY							PLANNER - DATE	NEXT ASS'Y W/O NO.
JOB TITLE: VERSAVAC 2 240 VAC				NEXT ASS'Y			ACCT. / PLANN. / STORES / STAGE / I.C. / OTHER	

DESCRIPTION	ITEM	PART/STOCK NO.	SUB	UNIT QUAN.	TOTAL REQ.	STORES ISS.	STORES CODE	DEC. FT.	P.O. NO. - VENDOR - DATE REMARKS - NOTES - MISC.
ASSEMBLY	1	511-0373		REF					
SCHEMATIC	2	511-0243		REF					
ARTWORK	3	511-0353		REF					
	4								
P.C. BOARD FAB	5	0511-0363-0		1					
SOLID STATE RELAY OPTO-22 MP240-D3	6	6041-0022-0		7					K1-K3, K7-K10
IC ULN-2003	7	6844-2003-0		1					U1
									A
IC SOCKET 14 PT WITH RETAINER	9	6844-9314-1		1					J1 A
CAPACITOR 100 µf 50V	10	6505-0116-1		1					C1
CAPACITOR 0.1 µf 50V	11	6960-0030-0		1					C2
DIODE 1N4006	12	6838-9410-0		1					CR1
RESISTOR NETWORK 784-3-R2.2K	13	6400-7843-0		4					RN1, RN2, RN4, RN5
L.E.D. H.P. HLMP-1301	14	6960-0025-0		7					DS1-DS3, DS7-DS10

MARKING: MICRO FILM CHANGE CONTROL

DRAWING NO.	REV.	CHK. DATE	APPV. DATE	AIRCO Temescal ② PARTS LIST	1/1	TOTAL NO. OF UNITS	ENG. RELEASE BY - DATE	PROJ./WORK ORDER NO.
0511-0373-1	A							
DWG. TITLE SOLID STATE RELAY P.C. ASSEMBLY							PLANNER - DATE	NEXT ASS'Y W/O NO.
JOB TITLE VERSAVAC 5 240 VAC				NEXT ASS'Y			ACCT. / PLANN. / STORES / STAGE / I.C. / OTHER	

DESCRIPTION	ITEM	PART/STOCK NO.	SUB	UNIT QUAN.	TOTAL REQ.	STORES ISS.	STORES CODE	DEC. FT.	P.O. NO. - VENDOR - DATE REMARKS - NOTES - MISC.
ASSEMBLY	1	511-0373		REF					
SCHEMATIC	2	511-0243		REF					
ARTWORK	3	511-0353		REF					
	4								
PC BOARD FAB	5	0511-0363-0		1					
SOLID STATE RELAY OPTO-22 MP-240-D3	6	6041-0022-0		10					K1-K10
IC ULN-2003	7	6844-2003-0		2					U1, U2
									A
IC SOCKET 14 PT WITH RETAINER	9	6844-9314-1		1					J1 A
CAPACITOR 100 µf 50V	10	6505-0116-1		1					C1
CAPACITOR 0.1 µf 50V	11	6960-0030-0		2					C2, C3
DIODE 1N4006	12	6838-9410-0		5					CR1
RESISTOR NETWORK 784-3-R2.2K	13	6400-7843-0		5					RN1-RN5
L.E.D. HP HLMP-1301	14	6960-0025-0		10					DS1-DS10

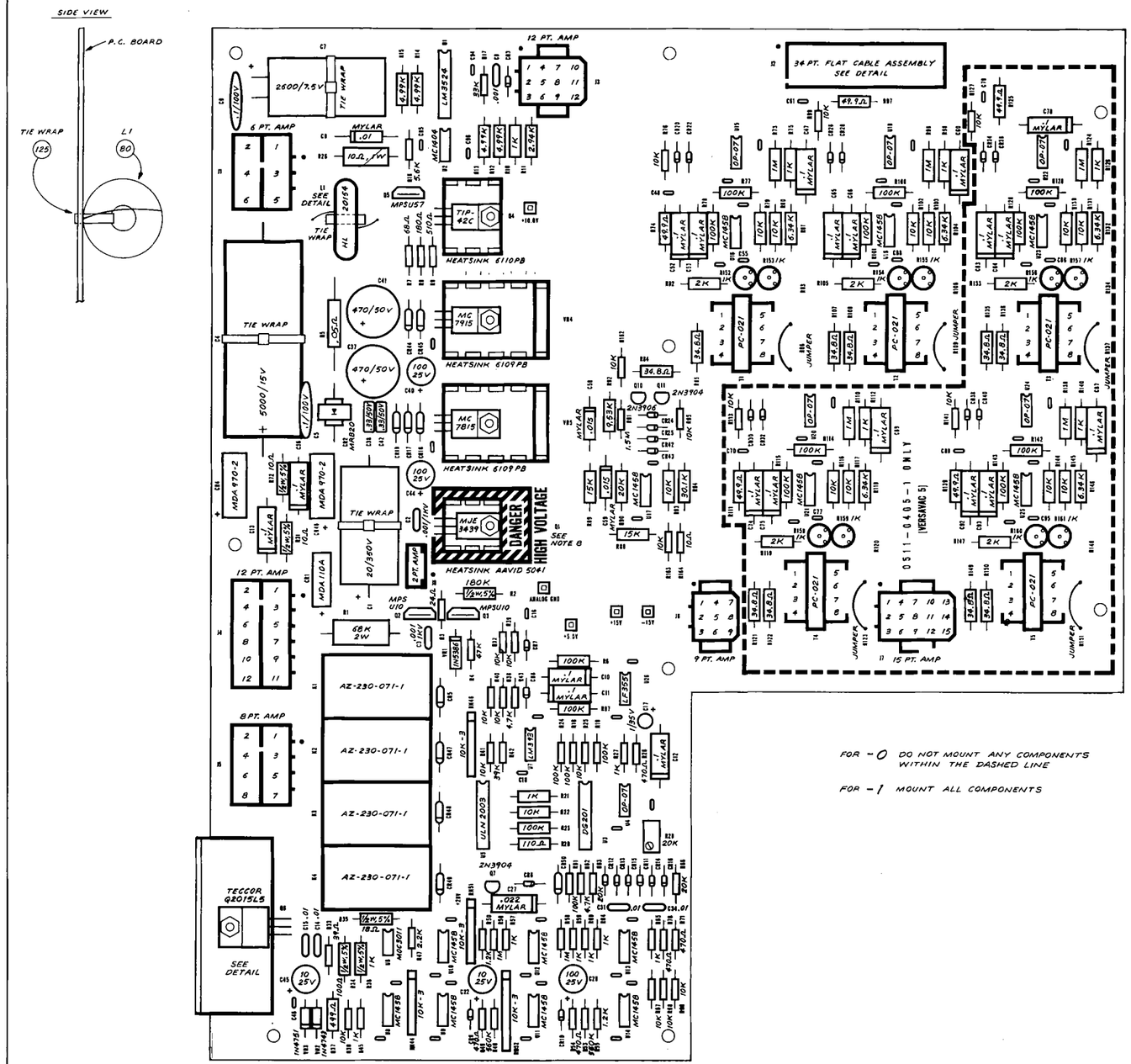

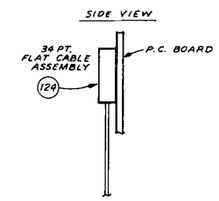

FOR -0 DO NOT MOUNT ANY COMPONENTS WITHIN THE DASHED LINE

FOR -1 MOUNT ALL COMPONENTS

NOTES: UNLESS OTHERWISE SHOWN

1. SCHEMATIC REF. 511-0174.
2. RESISTOR: 1/4 W, 5%
3. RESISTOR: 1% (RN60D)
4. CAPACITOR: 0.1/50V (112)
5. DIODE: 1N914 (33)
6. DIODE: 1N4006 (34)
7. TEST POINT: AMP 87224-1 (123)
8. Q1 (17) MOUNTS WITH METAL SIDE DOWN USING 4-40 SCREW (126) & NUT (128).

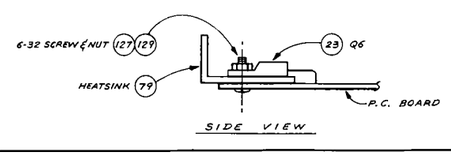

REV.	DESCRIPTION	BY	DATE	APP'VD
1	RS WAS .1 SQ.	R	4/4/85	
C	CHANGED C58, C63 FROM .01 TO .015	RS		RB
B	REMOVED CR21, CR23, CR27, CR29, CR31, CR33, CR35, CR37, CR39 FOR H.P. PEG. DCN #1973	BB	4/9/82	RB
A	REMOVED R83, 106, 120, 136 & 148; JUMPERED R86, 109, 123, 137, 151	JS	4-2-82	RB

UNLESS OTHERWISE SPECIFIED — 511-0164 GRID ON DWG. NO.

BREAK ALL SEARS — BAYRS SAVE — DO NOT SCALE DRAWING

TOLERANCE: XXX ± .005, XX ± .02, X ± .1

CHAMFER ENDS OF ALL SCREW THREADS 30° THREADS CLASS 2

AIRCO Temescal — A DIVISION OF AIRCO, INC. Berkeley, California

DRAWN BY JULIE STEPHENS — DATE 11/30/81 — CHK BY RB — APP BY RB — SCALE 2:1

VERSAVAC

POWER SUPPLY P.C. BOARD ASSEMBLY

DRAWING NUMBER 511-0405 — REV 1

PARTS LIST NO. 0511-0405-0 (SPARE)

511-0405 1

DRAWING NO	REV.	CHK. DATE	APPV. DATE	AIRCO Temescal PARTS LIST	1/8	TOTAL NO. OF UNITS	ENG. RELEASE BY - DATE	PROJ./WORK ORDER NO.
0511-0405-0	1							
DWG. TITLE Power Supply P.C. Assy.							PLANNER - DATE	NEXT ASS'Y W/O NO.
JOB TITLE Versa Vac 2				NEXT ASS'Y			ACCT. / PLANN. / STORES / STAGE / I.C. / OTHER	

DESCRIPTION	ITEM	PART/STOCK NO.	SUB	UNIT QUAN.	TOTAL REQ.	STORES ISS.	STORES CODE	DEC. FT.	P.O. NO. - VENDOR - DATE REMARKS - NOTES - MISC.
Assembly 511-0405	1						Ref.		
Schematic 511-0174	2						Ref.		
P.C. Board Fabrication	3	0511-0395-0		1					
Artwork 511-0385	4						Ref.		
LF-355N	5	6844-0355-0		1					U26
LM-3524 N	6	6844-3524-0		1					U1 National
MC 1404 U10	7	6844-1404-0		1					U2 Motorola
DG 201 CJ	8	6844-2010-0		1					U3 Siliconix
ULN-2003	9	6844-2003-0		1					U5
MOC-3011	10	6844-3011-0		1					U6
LM-393N	11	6844-0393-0		1					U7
OP-07 EP Precision Monolithic	12	6844-8207-0		3					U4, U15, U18
MC 1458 CP Motorola	13	6844-1458-0		10					U8-U14, U16, U17, U19
	14								A
	15								A
	16								

DRAWING NO.	REV.	CHK. DATE	APPV. DATE	AIRCO Temescal PARTS LIST	2/8	TOTAL NO. OF UNITS	ENG. RELEASE BY - DATE	PROJ./WORK ORDER NO.
0511-0405-0	1						PLANNER - DATE	NEXT ASS'Y W/O NO.
DWG. TITLE Power Supply P.C. Assembly							ACCT. / PLANN. / STORES / STAGE / I.C. / OTHER	
JOB TITLE Versa Vac 2				NEXT ASS'Y				

DESCRIPTION	ITEM	PART/STOCK NO.	SUB	UNIT QUAN.	TOTAL REQ.	STORES ISS.	STORES CODE	DEC. FT.	P.O. NO. - VENDOR - DATE REMARKS - NOTES - MISC.
Transistor MJE-3439	17	6823-3439-0		1					Q1
Transistor MPS U10	18	6823-0020-0		2					Q2, Q3
Transistor TIP-42C	19	6823-0042-0		1					Q4
Transistor MPS U57	20	6823-0570-0		1					Q5
Transistor 2 N 3904	21	6823-9040-0		2					Q7, Q11
Transistor 2N 3906	22	6823-9060-0		1					Q10
Triac Teccor Q201 5L5	23	6810-3030-0		1					Q6
Regulator MC 7815 CT	24	6928-7815-0		1					VR5
Regulator MC7915 CT	25	6928-7915-0		1					VR4
	26								
Bridge Rectifier MDA 110A	27	6842-0110-0		1					CR1 Motorola
Bridge Rectifier MDA-970-2	28	6842-0970-0		2					CR4, CR46 Motorola
Diode MR 820	29	6810-0820-0		1					CR2 Motorola
Zener Diode 1N 5386	30	6812-5386-0		1					VR1
" " 1N 4743	31	6812-4743-0		1					VR2
" " 1N 4751	32	6812-4751-0		1					VR3

DRAWING NO.	REV.	CHK. DATE	APPV. DATE	AIRCO Temescal PARTS LIST	3/8	TOTAL NO. OF UNITS	ENG. RELEASE BY - DATE	PROJ./WORK ORDER NO.
0511-0405-0	1						PLANNER - DATE	NEXT ASS'Y W/O NO.
DWG. TITLE Power Supply P.C. Assy							ACCT. / PLANN. / STORES / STAGE / I.C.	OTHER
JOB TITLE Versa Vac 2				NEXT ASS'Y				

DESCRIPTION	ITEM	PART/STOCK NO.	SUB	UNIT QUAN.	TOTAL REQ.	STORES ISS.	STORES CODE	DEC. FT.	P.O. NO. - VENDOR - DATE REMARKS - NOTES - MISC.
B Diode 1N914	33	6810-9140-0		20					CR3,CR6-16,CR20,CR22,CR24-26,CR28 CR42, CR43
Diode 1N4006	34	6838-9410-0		10					CR5, CR17-19, CR44-45, CR47-50 A
Resistor 10 Ω 1/4w	35	6404-4560-0		1					R164
Resistor 24 Ω 1/4w	36	6404-4567-0		1					R3
" 39 Ω 1/4w	37	6404-4576-0		1					R33
" 68 Ω 1/4w	38	6404-4580-0		1					R7
" 180 Ω 1/4w	39	6404-4597-0		1					R8
" 470 Ω "	40	6404-4610-0		5					R28,R49,R54,R70,R71
" 510 Ω "	41	6404-4612-0		1					R9
" 1k "	42	6404-4623-0		7					R27,R45,R57,R59,R60,R64,R65
" 1.2k "	43	6404-4621-0		2					R50,R55
" 2.2k "	44	6404-4631-0		1					R47
" 4.7k "	45	6404-4641-0		2					R43,R62
" 5.6k "	46	6404-4644-0		1					R16
" 10k "	47	6404-4654-0		15					R25,R30,R32,R38-41,R67-R69,R76, R99,R95,R162,R163
	48								

DRAWING NO.	REV.	CHK. DATE	APPV. DATE	AIRCO Temescal **PARTS LIST**	4/8	TOTAL NO. OF UNITS	ENG. RELEASE BY - DATE	PROJ./WORK ORDER NO.
0511-0405-0	1							
DWG. TITLE Power Supply P.C. Assy							PLANNER - DATE	NEXT ASS'Y W/O NO.
JOB TITLE Versa Vac 2				NEXT ASS'Y			ACCT. / PLANN. / STORES / STAGE / I.C. / OTHER	

DESCRIPTION	ITEM	PART/STOCK NO.	SUB	UNIT QUAN.	TOTAL REQ.	STORES ISS.	STORES CODE	DEC. FT.	P.O. NO. - VENDOR - DATE REMARKS - NOTES - MISC.
Resistor 20k 1/4w	49	6404-4661-0		2					R63,R66
" 33k "	50	6404-4667-0		1					R17
" 39k "	51	6404-4670-0		1					R42
" 47k "	52	6404-4675-0		1					R4
" 100k "	53	6404-4690-0		4					R18,R19,R24,R61
" 560k "	54	6404-4715-0		2					R48,R53
" IM "	55	6404-4725-0		2					R56,R58
" 1.5 Meg "	56	6404-4730-0		1					R91
	57								
Resistor 10 Ω 1/2w	58	6405-4561-0		2					R31,R72
" 18 Ω	59	6405-4567-0		1					R35
" 100 Ω	60	6405-4592-0		1					R34
" 1k	61	6405-4623-0		1					R36
" 180k	62	6405-4698-0		1					R2
	63								
	64								

DRAWING NO.	REV.	CHK. DATE	APPV. DATE	AIRCO Temescal PARTS LIST	5/8	TOTAL NO. OF UNITS	ENG. RELEASE BY - DATE	PROJ./WORK ORDER NO.
0511-0405-0	1							
DWG. TITLE Power Supply P.C. Assy							PLANNER - DATE	NEXT ASS'Y W/O NO.
JOB TITLE Versa Vac 2				NEXT ASS'Y			ACCT. / PLANN. / STORES / STAGE / I.C. / OTHER	

DESCRIPTION	ITEM	PART/STOCK NO.	SUB	UNIT QUAN.	TOTAL REQ.	STORES ISS.	STORES CODE	DEC. FT.	P.O. NO. - VENDOR - DATE REMARKS - NOTES - MISC.
Resistor 10 Ω 1w	65	6406-4561-0		1					R26
68k 2w	66	6407-4680-0		1					R1
0.05 ohm	67	6441-0001-0		1					R5 Dale RS-2B
	68								
Resistor Pack 785-3-R10k 10 pt	69	6400-0041-0		1					RN52 Beckman A
Resistor Pack 764-3-R10k	70	6400-0013-0		3					RN44,RN46,RN51 Beckman
	71								
Potentiometer 20k 66wR20k	72	6046-7940-0		1					R29 Beckman
Potentiameter 1k 3339H-1-1002	73	6046-2720-0		4					R152-R155 Bourns
	74								
Relay AZ 230-071-1	75	6041-0425-0		4					K1-K4 American Zettler
Heatsink Thermalloy P6109PB	76	6060-6109-0		2					For VR4, VR5
Heatsink Thermalloy P6110PB	77	6060-6110-0		1					For Q4
Heatsink AAVID 5041B	78	6060-5041-0		1					For Q1
Heatsink Fab	79	0511-0702-0		1					For Q6
Inductor Hurricane Elec HL-20154	80	6054-0150-0		1					L1 150μH

DRAWING NO.	REV.	CHK. DATE	APPV. DATE	AIRCO Temescal PARTS LIST	6/8	TOTAL NO. OF UNITS	ENG. RELEASE BY - DATE	PROJ./WORK ORDER NO.
0511-0405-0	1							
DWG. TITLE Power Supply P.C. Assy							PLANNER - DATE	NEXT ASS'Y W/O NO.
JOB TITLE Versa Vac 2				NEXT ASS'Y			ACCT. / PLANN. / STORES / STAGE / I.C. / OTHER	

DESCRIPTION	ITEM	PART/STOCK NO.	SUB	UNIT QUAN.	TOTAL REQ.	STORES ISS.	STORES CODE	DEC. FT.	P.O. NO. - VENDOR - DATE REMARKS - NOTES - MISC.
Resistor 34.8 ohm 1% RN60D	81	6448-5348-0		4					R84,R85,R107,R108
" 49.9 ohm "	82	6448-5449-0		2					R74,R97
" 110 ohm "	83	6448-5122-0		1					R20
" 499 ohm "	84	6448-5310-0		1					R37 A
" 1k "	85	6448-5100-0		4					R10,R21,R75,R98
" 2.94k "	86	6448-4790-0		1					R11
Resistor 2k 1% RN60D	87	6448-5620-0		2					R82,R105
	88								A
" 4.99k "	89	6448-2642-0		4					R12-R15
" 6.34k "	90	6448-5115-0		2					R81,R104,
" 10k "	91	6448-5170-0		6					R22,R79,R80,R93,R102,R103
" 15k "	92	6448-5615-0		2					R88,R89
" 9.53k "	93	6405-4153-0		1					R92
" 100k "	94	6405-4197-0		7					R23,R77,R78,R87,R100,R101,R6
" 1 meg "	95	6448-5610-0		2					R73,R96
" 20k "	96	6448-5160-0		1					R90
" 30.1k "	97	6448-5301-0		1					R94

DRAWING NO.	REV.	CHK. DATE	APPV. DATE	AIRCO Temescal **PARTS LIST**	7/8	TOTAL NO. OF UNITS	ENG. RELEASE BY - DATE	PROJ./WORK ORDER NO.
0511-0405-0	1						PLANNER - DATE	NEXT ASS'Y W/O NO.
DWG. TITLE Power Supply P.C. Assy							ACCT. / PLANN. / STORES / STAGE / I.C. / OTHER	
JOB TITLE Versa Vac 2				NEXT ASS'Y				

DESCRIPTION	ITEM	PART/STOCK NO.	SUB	UNIT QUAN.	TOTAL REQ.	STORES ISS.	STORES CODE	DEC. FT.	P.O. NO. - VENDOR - DATE REMARKS - NOTES - MISC.
Capacity 5000 µf 15V	98	6505-8131-0		1					C4 TC1550B Mallory
" 2600 µf 7.5V	99	6505-7595-0		1					C7 Mallory VPR262U7R5J1LIJ
" 470 µf 50V	100	6505-6532-0		2					C37,C41, Mallory VTL470S50
" 100 µf 25V	101	6505-0116-3		3					C28,C40,C44
" 20 µf 350V	102	6510-0165-0		1					C1 CDE WBR20-350
" 10 µf 25V	103	6960-0069-0		2					C22,C45
" 1 µf 35V	104	6528-1035-0		1					C17
" 0.1 µf Mylar	105	6517-1933-1		11					C10-C13,C36,C47,C52,C53,C60,C65 C66
" 0.01 µf Mylar	106	6517-1929-0		3					C8,
" .022 µf Mylar	107	6517-1900-1		1					C27
" 0.33 µf 50V	108	6503-3350-1		2					C38,C42
" 0.1 µf disc 100V	109	6504-5999-0		2					C5,C6
" 0.01 µf disc 50V	110	6503-1643-0		4					C14,C15,C31,C34
" .001 µf 1KV	111	6503-1575-0		3					C2,C3,C9
" 0.1 µf 50V	112	6960-0030-0		40					
" 0.015 uf 200 VDC Mylar	113	6517-1930-0							C58, C59

DRAWING NO.	REV.	CHK. DATE	APPV. DATE	AIRCO Temescal **PARTS LIST**	8/8	TOTAL NO. OF UNITS	ENG. RELEASE BY - DATE	PROJ./WORK ORDER NO.
0511-0405-0	1							
DWG. TITLE Power Supply P.C. Assy							PLANNER - DATE	NEXT ASS'Y W/O NO.
JOB TITLE Versa Vac 2				NEXT ASS'Y			ACCT. / PLANN. / STORES / STAGE / I.C. / OTHER	

DESCRIPTION	ITEM	PART/STOCK NO.	SUB	UNIT QUAN.	TOTAL REQ.	STORES ISS.	STORES CODE	DEC. FT.	P.O. NO. - VENDOR - DATE REMARKS - NOTES - MISC.
Transformer PC-021 TRW	114	6054-0021-0		2					T1,T2
	115								
Connector 2pt AMP 350209-1	116	6047-0302-0		1					J8
" 6pt AMP 1-380999-0	117	6047-0316-0		1					J1
" 12pt AMP 9-350264-1	118	6047-0012-1		1					J3
" 12pt AMP 350213-1	119	6047-0320-0		1					J4
" 8pt AMP 350212-1	120	6047-0408-0		1					J5
" 9pt AMP 9-350261-0	121	6047-0429-0		1					J6
	122								
Test point AMP 87224-1	123	6047-7224-1		5					TP1-TP5
34 pt Flat Cable Assembly	124	0511-8352-0	X	1					J2
Tie Wrap	125	6348-0372-0		4					Mount C1,C4,C7,L1 A
Screw 4-40 x 3/8"	126	1240-0854-0		1					Mount Q1
Screw 6-32 x 3/8"	127	1240-1254-0		1					Mount Q6
Nut 4-40	128	1258-0800-0		1					Mount Q1
Nut 6-32	129	1260-1204-0		4					Mount Q6,Q4,VR4,VR5 A

DRAWING NO.	REV.	CHK. DATE	APPV. DATE	AIRCO Temescal PARTS LIST	1/8	TOTAL NO. OF UNITS	ENG. RELEASE BY - DATE	PROJ./WORK ORDER NO.
0511-0405-1	1							
DWG. TITLE Power Supply P.C. Assy							PLANNER - DATE	NEXT ASS'Y W/O NO.
JOB TITLE Versa Vac 5				NEXT ASS'Y			ACCT. / PLANN. / STORES / STAGE / I.C. / OTHER	

DESCRIPTION	ITEM	PART/STOCK NO.	SUB	UNIT QUAN.	TOTAL REQ.	STORES ISS.	STORES CODE	DEC. FT.	P.O. NO. - VENDOR - DATE REMARKS - NOTES - MISC.
Assembly 511-0405	1						Ref.		
Schematic 511-0174	2						Ref.		
P.C. Board Fabrication	3	0511-0395-0		1					
Artwork 511-0385	4						Ref.		
LF-355N	5	6844-0355-0		1					U26
LM-3524N	6	6844-3524-0		1					U1 National
MC 1404 U10	7	6844-1404-0		1					U2 Motorola
DG 201 CJ	8	6844-2010-0		1					U3 Siliconix
ULN-2003	9	6844-2003-0		1					U5 Sprague
MOC-3011	10	6844-3011-0		1					U6 Motrola
LM-393N	11	6844-0393-0		1					U7
OP-07 EP Precision Monolithic	12	6844-8207-0		6					U4,U15,U18,U20,U22,U24
MC 1458CP Motorola	13	6844-1458-0		13					U8-U14,U16,U17,U19,U21,U23,U25
	14								A
	15								A
	16								

DRAWING NO.	REV.	CHK. DATE	APPV. DATE	AIRCO Temescal **PARTS LIST**	2/8	TOTAL NO. OF UNITS	ENG. RELEASE BY - DATE	PROJ./WORK ORDER NO.
0511-0405-1	1							
DWG. TITLE Power Supply P.C. Assembly							PLANNER - DATE	NEXT ASS'Y W/O NO.
JOB TITLE Versa Vac 5				NEXT ASS'Y			ACCT. / PLANN. / STORES / STAGE / I.C. / OTHER	

DESCRIPTION	ITEM	PART/STOCK NO.	SUB	UNIT QUAN.	TOTAL REQ.	STORES ISS.	STORES CODE	DEC. FT.	P.O. NO. - VENDOR - DATE REMARKS - NOTES - MISC.
Transistor MJE-3439	17	6823-3439-0		1					Q1
Transistor MPS U10	18	6823-0020-0		2					Q2,Q3
Transistor TIP-42C	19	6823-0042-0		1					Q4
Transistor MPS U57	20	6823-0570-0		1					Q5
Transistor 2N3904	21	6823-9040-0		2					Q7,Q11
Transistor 2N3906	22	6823-9060-0		1					Q10
Triac Teccor Q2015L5	23	6810-3030-0		1					Q6
Regulator MC7815 CT	24	6928-7815-0		1					VR5
Regulator MC7915CT	25	6928-7915-0		1					VR4
	26								
Bridge Rectifier MDA 110A	27	6842-0110-0		1					CR1 Motorola
Bridge Rectifier MDA-970-2	28	6842-0970-0		2					CR4,CR46, Motorola
Diode MR820	29	6810-0820-0		1					CR2 Motorola
Zener Diode 1N 5386	30	6812-5386-0		1					VR1
" " 1N 4743	31	6812-4743-0		1					VR2
" " 1N 4751	32	6812-4751-0		1					VR3

DRAWING NO.	REV.	CHK. DATE	APPV. DATE	AIRCO Temescal **PARTS LIST**	3/8	TOTAL NO. OF UNITS	ENG. RELEASE BY - DATE	PROJ./WORK ORDER NO.
0511-0405-1	1							
DWG. TITLE Power Supply P.C. Assy							PLANNER - DATE	NEXT ASS'Y W/O NO.
JOB TITLE Versa Vac 5				NEXT ASS'Y			ACCT. / PLANN. / STORES / STAGE / I.C. / OTHER	

DESCRIPTION	ITEM	PART/STOCK NO.	SUB	UNIT QUAN.	TOTAL REQ.	STORES ISS.	STORES CODE	DEC. FT.	P.O. NO. - VENDOR - DATE REMARKS - NOTES - MISC.
B Diode 1N914	33	6810-9140-0		26					CR3,CR6-16,CR20,CR22,CR24-26,CR28 CR30,CR32,CR34,CR36,CR38,CR40,42,43
Diode 1N4006	34	6838-9410-0		10					CR5,CR17-19,CR44-45,CR47-50
Resistor 10 Ω 1/4w	35	6404-4560-0		1					R164
Resistor 24 Ω 1/4w	36	6404-4567-0		1					R3
" 39 Ω "	37	6404-4576-0		1					R33
" 68 Ω "	38	6404-4580-0		1					R7
" 180 Ω "	39	6404-4597-0		1					R8
" 470 Ω "	40	6404-4610-0		5					R28,R49,R54,R70,R71
" 510 Ω "	41	6404-4612-0		1					R9
" 1k "	42	6404-4623-0		7					R27,R45,R57,R59,R60,R64,R65
" 1.2k "	43	6404-4621-0		2					R50,R55
" 2.2k "	44	6404-4631-0		1					R47
" 4.7k "	45	6404-4641-0		2					R43,R62
" 5.6k "	46	6404-4644-0		1					R16
" 10k "	47	6404-4654-0		18					R25,R30,R32,R38-R41,R67-R69,R76, R95,R99,R113,R127,R141,R162,R163
	48								

DRAWING NO.	REV.	CHK. DATE	APPV. DATE	AIRCO Temescal PARTS LIST	4/8	TOTAL NO. OF UNITS	ENG. RELEASE BY - DATE	PROJ./WORK ORDER NO.
0511-0405-1	1							
DWG. TITLE Power Supply P.C. Assy							PLANNER - DATE	NEXT ASS'Y W/O NO.
JOB TITLE Versa Vac 5				NEXT ASS'Y			ACCT. / PLANN. / STORES / STAGE / I.C. / OTHER	

DESCRIPTION	ITEM	PART/STOCK NO.	SUB	UNIT QUAN.	TOTAL REQ.	STORES ISS.	STORES CODE	DEC. FT.	P.O. NO. - VENDOR - DATE REMARKS - NOTES - MISC.
Resistor 20k 1/4w	49	6404-4661-0		2					R63,R66
" 33k "	50	6404-4667-0		1					R17
" 39k "	51	6404-4670-0		1					R42
" 47k "	52	6404-4675-0		1					R4
" 100k "	53	6404-4690-0		4					R18,R19,R24,R61
" 560k "	54	6404-4715-0		2					R48,R53
" 1M "	55	6404-4725-0		2					R56,R58
" 1.5Meg "	56	6404-4730-0		1					R91
	57								
Resistor 10 Ω 1/2w	58	6405-4561-0		2					R31,R72
" 18 Ω "	59	6405-4567-0		1					R35
" 100 Ω "	60	6405-4592-0		1					R34
" 1k "	61	6405-4623-0		1					R36
" 180k "	62	6405-4698-0		1					R2
	63								
	64								

DRAWING NO.	REV.	CHK. DATE	APPV. DATE	AIRCO Temescal PARTS LIST	5/8	TOTAL NO. OF UNITS	ENG. RELEASE BY - DATE	PROJ./WORK ORDER NO.
0511-0405-1	1							
DWG. TITLE Power Supply P.C. Assy							PLANNER - DATE	NEXT ASS'Y W/O NO.
JOB TITLE Versa Vac 5				NEXT ASS'Y			ACCT. / PLANN. / STORES / STAGE / I.C. / OTHER	

DESCRIPTION	ITEM	PART/STOCK NO.	SUB	UNIT QUAN.	TOTAL REQ.	STORES ISS.	STORES CODE	DEC. FT.	P.O. NO. - VENDOR - DATE REMARKS - NOTES - MISC.
Resistor 10Ω 1w	65	6406-4561-0		1					R26
" 68k 2w	66	6407-4680-0		1					R1
" 0.15 ohm	67	6441-0001-0		1					R5 Dale RS-2B △1
	68								
Resistor Pack 785-3-R10k 10pt	69	6400-0041-0		1					RN52 Beckman △A
" " 764-3-R10k 8pt	70	6400-0013-0		3					RN44,RN46,RN51 Beckman
	71								
Potentiometer 20k 66WR20k	72	6046-7940-0		1					R29 Beckman
Potentiometer 1k 3339H-1-1002	73	6046-2720-0		10					R152-R161 Bourns
	74								
Relay AZ230-071-1	75	6041-0425-0		4					K1-K4 American Zettler
Heatsink Thermalloy P6109PB	76	6060-6109-0		2					For VR4, VR5
Heatsink Thermalloy P6110PB	77	6060-6110-0		1					For Q4
Heatsink AAVID 5041B	78	6060-5041-0		1					For Q1
Heatsink Fab	79	0511-0702-0		1					For Q6
Inductor Hurricane Elec. HL-20154	80	6054-0150-0		1					L1 150μH

DRAWING NO.	REV.	CHK. DATE	APPV. DATE	AIRCO Temescal PARTS LIST	6/8	TOTAL NO. OF UNITS	ENG. RELEASE BY - DATE	PROJ./WORK ORDER NO.
0511-0405-1	1							
DWG. TITLE Power Supply P.C. Assy							PLANNER - DATE	NEXT ASS'Y W/O NO.
JOB TITLE Versa Vac 5				NEXT ASS'Y			ACCT. / PLANN. / STORES / STAGE / I.C. / OTHER	

DESCRIPTION	ITEM	PART/STOCK NO.	SUB	UNIT QUAN.	TOTAL REQ.	STORES ISS.	STORES CODE	DEC. FT.	P.O. NO. - VENDOR - DATE REMARKS - NOTES - MISC.
Resistor 34.8 ohm 1% RN60D	81	6448-5348-0		10					R136,R149,R150 R84,R85,R107,R108,R121,R122,R135
" 49.9 ohm "	82	6448-5449-0		5					R74,R97,R111,R125,R139
" 110 ohm "	83	6448-5122-0		1					R20
" 499 ohm "	84	6448-5310-0		1					R37 A
" 1k "	85	6448-5100-0		7					R10,R21,R75,R98,R126,R140,R112
" 2.94k "	86	6448-4790-0		1					R11
Resistor 2k 1% RN60D	87	6448-5620-0		5					R82,R105,R119,R133,R147
	88								A
" 4.99k "	89	6448-2642-0		4					R12-R15
" 6.34k "	90	6448-5115-0		5					R81,R104,R118,R132,R146
" 10k "	91	6448-5170-0		12					,R117,R130,R131,R144,R145 R22,R79, R80,R93,R102,R103,R116
" 15k "	92	6448-5615-0		2					R88,R89
" 9.53k "	93	6405-4153-0		1					R92
" 100k "	94	6405-4197-0		13					R23,R77,R78,R87,R100,R101,R6 R114,R115,R128,R129,R142,R143
" 1 meg "	95	6448-5610-0		5					R73,R96,R110,R124,R138
" 20k "	96	6448-5160-0		1					R90
" 30.1k "	97	6448-5301-0		1					R94

DRAWING NO.	REV.	CHK. DATE	APPV. DATE	AIRCO Temescal **PARTS LIST**	7/8	TOTAL NO. OF UNITS	ENG. RELEASE BY - DATE	PROJ./WORK ORDER NO.
0511-0405-1	1						PLANNER - DATE	NEXT ASS'Y W/O NO.
DWG. TITLE Power Supply P.C. Assy							ACCT. / PLANN. / STORES / STAGE / I.C. / OTHER	
JOB TITLE Versa Vac 5				NEXT ASS'Y				

DESCRIPTION	ITEM	PART/STOCK NO.	SUB	UNIT QUAN.	TOTAL REQ.	STORES ISS.	STORES CODE	DEC. FT.	P.O. NO. - VENDOR - DATE REMARKS - NOTES - MISC.
Capacitor 5000 µf 15V	98	6505-8131-0		1					C4 TC1550B Mallory
" 2600 µf 7.5V	99	6505-7595-0		1					C7 Mallory VPR262U7R5J11LJ
" 470 µf 50V	100	6505-6532-0		2					C37,C41 Mallory VTL470S50
" 100 µf 25V	101	6505-0116-3		3					C28,C40,C44
" 20 µf 350V	102	6510-0165-0		1					C1 CDE, WBR 20-350
" 10 µf 25V	103	6960-0069-0		2					C22, C45
" 1 µf 35V	104	6528-1035-0		1					C17
" 0.1 µf Mylar	105	6517-1933-1		20					C66,C69,C74,C75,C78,C83,C84,C87 C10-C13,C36,C47,C52,C53,C60,C65, C92,C93
" 0.01 µf Mylar	106	6517-1929-0		3					C8, ~~_____~~ C
" .022 µf Mylar	107	6517-1900-1		1					C27
" 0.33 µf 50V	108	6503-3350-1		2					C38,C42
" 0.1 µf disc 100V	109	6504-5999-0		2					C5,C6
" 0.01 µf disc 50V	110	6503-1643-0		4					C14,C15,C31,C34
" .001 µf 1KV	111	6503-1575-0		3					C2,C3,C9
" 0.1 µf 50V	112	6960-0030-0		58					
" 0.015 uf 200VDC Mylar	113	6517-1930-0							C58,C59 C

DRAWING NO.	REV.	CHK. DATE	APPV. DATE	AIRCO Temescal **PARTS LIST**	8/8	TOTAL NO. OF UNITS	ENG. RELEASE BY - DATE	PROJ./WORK ORDER NO.
0511-0405-1	1						PLANNER - DATE	NEXT ASS'Y W/O NO.
DWG. TITLE Power Supply P.C. Assy							ACCT. / PLANN. / STORES / STAGE / I.C. / OTHER	
JOB TITLE Versa Vac 5				NEXT ASS'Y				

DESCRIPTION	ITEM	PART/STOCK NO.	SUB	UNIT QUAN.	TOTAL REQ.	STORES ISS.	STORES CODE	DEC. FT.	P.O. NO. - VENDOR - DATE REMARKS - NOTES - MISC.
Transformer PC-021 TRW	114	6054-0021-0		5					T1-T5
	115								
Connector 2pt AMP 350209-1	116	6047-0302-0		1					J8
" 6pt AMP 1-380999-0	117	6047-0316-0		1					J1
" 12pt AMP 9-350264-1	118	6047-0012-1		1					J3
" 12pt AMP 350213-1	119	6047-0320-0		1					J4
" 8pt AMP 350212-1	120	6047-0408-0		1					J5
" 9pt AMP 9-350261-1	121	6047-0429-0		1					J6
" 15pt AMP 9-350267-1	122	6047-0445-0		1					J7
Test Point AMP 87224-1	123	6047-7224-1		5					TP1-TP5
34 pt Flat Cable Assembly	124	0511-8352-0	X	1					J2
Tie Wrap	125	6348-0372-0		4					Mount C1,C4,C7,L1
Screw 4-40 x 3/8"	126	1240-0854-0		1					Mount Q1 A
Screw 6-32 x 3/8"	127	1240-1254-0		1					Mount Q6
Nut 4-40	128	1258-0800-0		1					Mount Q1
Nut 6-32	129	1260-1204-0							Mount Q6, Q4, VR4, VR5 A

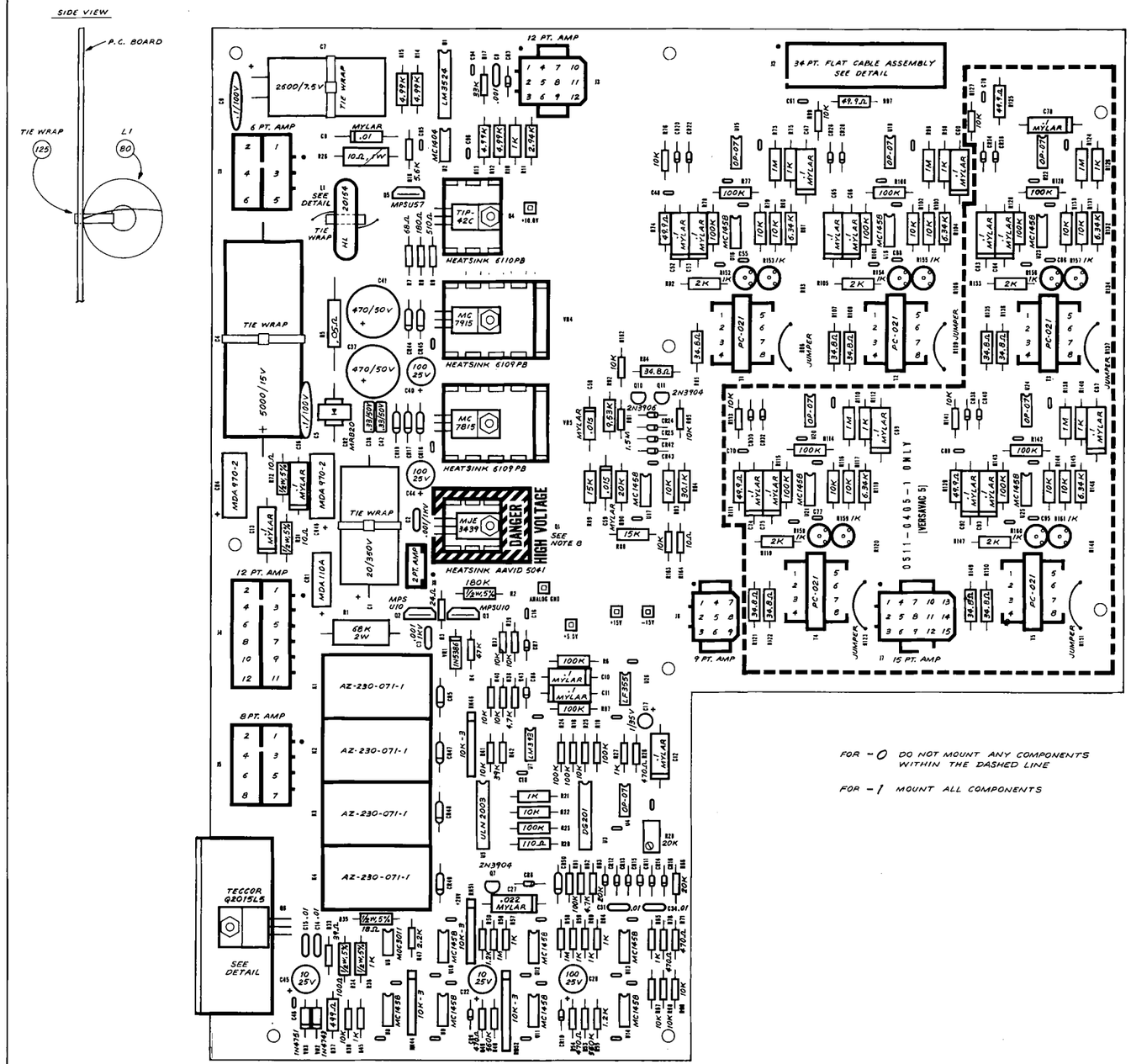

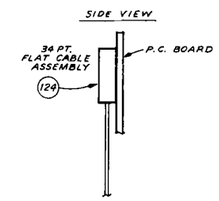

FOR -0 DO NOT MOUNT ANY COMPONENTS WITHIN THE DASHED LINE

FOR -1 MOUNT ALL COMPONENTS

NOTES: UNLESS OTHERWISE SHOWN

1. SCHEMATIC REF. 511-0174.
2. RESISTOR: 1/4 W, 5%
3. RESISTOR: 1% (RN60D)
4. CAPACITOR: 0.1/50V (112)
5. DIODE: 1N914 (33)
6. DIODE: 1N4006 (34)
7. TEST POINT: AMP 87224-1 (123)
8. Q1 (17) MOUNTS WITH METAL SIDE DOWN USING 4-40 SCREW (126) & NUT (128).

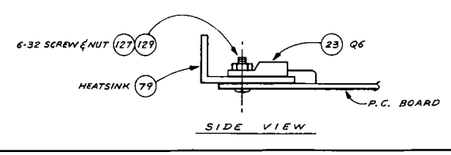

REV.	DESCRIPTION	BY	DATE	APP'VD
1	RS WAS .1 SQ.	R	4/4/85	
C	CHANGED C58, C63 FROM .01 TO .015	RS		RB
B	REMOVED CR21, CR23, CR27, CR29, CR31, CR33, CR35, CR37, CR39 FOR H.P. PEG. DCN #1973	BB	4/9/82	RB
A	REMOVED R83, 106, 120, 136 & 148; JUMPERED R86, 109, 123, 137, 151	JS	4-2-82	RB

UNLESS OTHERWISE SPECIFIED — 511-0164 GRID ON DWG. NO.

BREAK ALL SEARS — BAYRS SAVE — DO NOT SCALE DRAWING

TOLERANCE: XXX ± .005, XX ± .02, X ± .1

CHAMFER ENDS OF ALL SCREW THREADS 30° THREADS CLASS 2

AIRCO Temescal — A DIVISION OF AIRCO, INC. Berkeley, California

DRAWN BY JULIE STEPHENS — DATE 11/30/81 — CHK BY RB — APP BY RB — SCALE 2:1

VERSAVAC

POWER SUPPLY P.C. BOARD ASSEMBLY

DRAWING NUMBER 511-0405 — REV 1

PARTS LIST NO. 0511-0405-0 (SPARE)

511-0405 1

DRAWING NO.	REV.	CHK. DATE	APPV. DATE	AIRCO Temescal PARTS LIST	1/7	TOTAL NO. OF UNITS	ENG. RELEASE BY - DATE	PROJ./WORK ORDER NO.
0511-0435-0	2		10/13/83					
DWG. TITLE CPU PC BOARD ASSEMBLY							PLANNER - DATE	NEXT ASS'Y W/O NO.
JOB TITLE VERSA VAC				NEXT ASS'Y			ACCT. / PLANN. / STORES / STAGE / I.C. / OTHER	

DESCRIPTION	ITEM	PART/STOCK NO.	SUB	UNIT QUAN.	TOTAL REQ.	STORES ISS.	STORES CODE	DEC. FT.	P.O. NO. - VENDOR - DATE REMARKS - NOTES - MISC.
ASSEMBLY 511-0435	1						REF		
SCHEMATIC 511-0174	2						REF		
P.C. BOARD FAB	3	0511-0425-0		1					
ARTWORK 511-0415	4						REF		
	5								
	6								
IC MC14002	7	6844-4002-0		1					U8
IC MC14082	8	6844-4082-0		1					U30
IC MC14174	9	6844-4174-0		1					U1
IC MC14520	10	6844-4520-0		1					U25
IC MC14566	11	6844-4566-0		1					U52
IC MC14584	12	6844-4584-0		2					U14, U46
IC MC14585	13	6844-4585-0		4					U26, U31, U36, U41
	14								
	15								
	16								

DRAWING NO.	REV.	CHK. DATE	APPV. DATE	AIRCO Temescal PARTS LIST	2/7	TOTAL NO. OF UNITS	ENG. RELEASE BY - DATE	PROJ./WORK ORDER NO.
0511-0435-0	2							
DWG. TITLE CPU PC BOARD ASSEMBLY							PLANNER - DATE	NEXT ASS'Y W/O NO.
JOB TITLE VERSA VAC				NEXT ASS'Y			ACCT. / PLANN. / STORES / STAGE / I.C. / OTHER	

DESCRIPTION	ITEM	PART/STOCK NO.	SUB	UNIT QUAN.	TOTAL REQ.	STORES ISS.	STORES CODE	DEC. FT.	P.O. NO. - VENDOR - DATE REMARKS - NOTES - MISC.
IC SN74LS00N	17	6844-7400-1		1					U59
IC SN74LS02N	18	6844-7402-2		5					U20,22,45,50,57
IC SN74LS03N	19	6844-7403-0		1					U47
IC SN74LS11N	20	6844-7411-0		1					U55
IC SN74LS20N	21	6844-7420-0		1					U51
IC SN74LS22N	22	6844-7422-0		1					U54
IC SN74LS32N	23	6844-7432-0		1					U29
	24								
IC SN74LS138N	25	6844-7413-0		1					U27
IC SN74LS154	26	6844-7454-0		1					U21
IC SN74LS373	27	6844-7473-0		10					U10,16,19,37,42,60,61,62, 63,3
IC SN74LS375 SIGNETICS	28	6844-7475-0		1					U23
	29								
IC TIL111	30	6844-0111-0		20					U69-U78,U80 - 89
IC LF355N	31	6844-0355-0		1					U7
IC ULN-2003	32	6844-2003-0		6					U6,13,24,66-68

DRAWING NO.	REV.	CHK. DATE	APPV. DATE	AIRCO Temescal PARTS LIST	3/7	TOTAL NO. OF UNITS	ENG. RELEASE BY - DATE	PROJ./WORK ORDER NO.
0511-0435-0	2							
DWG. TITLE CPU PC BOARD ASSEMBLY							PLANNER - DATE	NEXT ASS'Y W/O NO.
JOB TITLE VERSA VAC				NEXT ASS'Y			ACCT. / PLANN. / STORES / STAGE / I.C. / OTHER	

DESCRIPTION	ITEM	PART/STOCK NO.	SUB	UNIT QUAN.	TOTAL REQ.	STORES ISS.	STORES CODE	DEC. FT.	P.O. NO. - VENDOR - DATE REMARKS - NOTES - MISC.
IC 81LS95	33	6844-8195-0		1					U9
IC 81LS96	34	6844-8196-0		4					U5,12,18,65
IC 8T97	35	6844-0897-0		4					U33,38,43,53
IC 8T98	36	6844-0898-0		1					U49
IC DP8304BN	37	6844-8304-0		2					U48, U58
IC MC6808P on units MC6802P	38	6844-6808-0		1					U32
	39								
IC MC1458CP	40	6844-1458-0		1					U79
IC AD570JD	41	6844-0570-0		1					U15
IC AD7524JN	42	6844-7524-0		1					U64
IC LM393	43	6844-0393-0		1					U56
IC DG508	44	6844-0508-0		1					U2
IC HM-6514-9	45	6844-6514-0		2					U35, 40
	46								
PROGRAM CHIP SET	47	0511-8982-0	X	1					
	48								

DRAWING NO.	REV.	CHK. DATE	APPV. DATE	AIRCO Temescal PARTS LIST	4/7	TOTAL NO. OF UNITS	ENG. RELEASE BY - DATE	PROJ./WORK ORDER NO.
0511-0435-0	2							
DWG. TITLE CPU PC BOARD ASSEMBLY							PLANNER - DATE	NEXT ASS'Y W/O NO.
JOB TITLE VERSA VAC				NEXT ASS'Y			ACCT. / PLANN. / STORES / STAGE / I.C. / OTHER	

	DESCRIPTION	ITEM	PART/STOCK NO.	SUB	UNIT QUAN.	TOTAL REQ.	STORES ISS.	STORES CODE	DEC. FT.	P.O. NO. - VENDOR - DATE REMARKS - NOTES - MISC.
4	DIODE 1N4006	49	6838-9410-0		9					CR4, 7-10, 13-16
	DIODE 1N914	50	6810-9140-0		3					CR1, 5, 6
	DIODE HP-5082-2811	51	6838-5082-2		1					CR11
	DIODE 1N5817	52	6815-5817-0		2					CR2, 3
7	RESISTOR 100Ω 1/2 W 5%	53	6405-45920		1					R 52
	IC SOCKET 40 PT	54	6844-9340-0		1					U32
	IC SOCKET 24 PT	55	6844-9324-0		4					U28, 34, 39, 44
		56								A
	IC SOCKET 18 PT	57	6920-9318-0		2					U35, 40 A
		58								A
	IC SOCKET 14 PT WITH RETAINER	59	6844-9314-1		1					J7 A
		60								A
		61								
9	BATTERY GOULD MS1003 3.6V	62	6170-1003-0		1					B1
		63								
		64								

DRAWING NO.	REV.	CHK. DATE	APPV. DATE	AIRCO temescal PARTS LIST	5/7	TOTAL NO. OF UNITS	ENG. RELEASE BY - DATE	PROJ./WORK ORDER NO.
0511-0435-0	2							
DWG. TITLE CPU PC BOARD ASSEMBLY							PLANNER - DATE	NEXT ASS'Y W/O NO.
JOB TITLE VERSA VAC				NEXT ASS'Y			ACCT. / PLANN. / STORES / STAGE / I.C. / OTHER	

	DESCRIPTION	ITEM	PART/STOCK NO.	SUB	UNIT QUAN.	TOTAL REQ.	STORES ISS.	STORES CODE	DEC. FT.	P.O. NO. - VENDOR - DATE REMARKS - NOTES - MISC.
	RESISTOR PACK 330 OHM-1, 10 PT	65	6400-0330-0		2					RN6, RN7
	RESISTOR PACK 3.3K-1, 8 PT	66	6400-0003-3		1					RN5
	RESISTOR PACK 1K-1, 10 PT	67	6400-0001-0		3					RN2 - RN4
	RESISTOR PACK 100K-1, 8 PT	68	6400-0081-0		1					RN1
C	RESISTOR 47 OHM 1/4W	69	6404-4579-0		1					R9
	RESISTOR 10 OHM 1/4W	70	6404-4560-0		16					R35 - R50
	RESISTOR 15 OHM 1/4W	71	6404-4563-0		1					R4
C	RESISTOR 120 OHM 1/4W	72	6404-4594-0		1					R18
	RESISTOR 220 OHM 1/4W	73	6404-4600-0		2					R8, R31
	RESISTOR 1K 1/4W	74	6404-4623-0		1					R10
	RESISTOR 2K 1/4W	75	6404-4630-0		4					R25 - R28
	RESISTOR 3.3K 1/4W	76	6404-4636-0		4					R15, R22 - R24
	RESISTOR 10K 1/4W	77	6404-4654-0		4					R14, R16, R19, R21
	RESISTOR 100K 1/4W	78	6404-4690-0		1					R20
	RESISTOR 240K 1/4W	79	6404-4701-0		1					R7
	RESISTOR 390K 1/4W	80	6404-4707-0		1					R17

DRAWING NO.	REV.	CHK. DATE	APPV. DATE	AIRCO temescal PARTS LIST	6/7	TOTAL NO. OF UNITS	ENG. RELEASE BY - DATE	PROJ./WORK ORDER NO.
0511-0435-0	2							
DWG. TITLE CPU PC BOARD ASSEMBLY							PLANNER - DATE	NEXT ASS'Y W/O NO.
JOB TITLE VERSA VAC				NEXT ASS'Y			ACCT. / PLANN. / STORES / STAGE / I.C. / OTHER	

DESCRIPTION	ITEM	PART/STOCK NO.	SUB	UNIT QUAN.	TOTAL REQ.	STORES ISS.	STORES CODE	DEC. FT.	P.O. NO. - VENDOR - DATE REMARKS - NOTES - MISC.
RESISTOR 2.2M 1/4W	81	6404-4735-0		1					R3
RESISTOR 1.5K 1/2W	82	6405-4627-0		4					R29, 32-34
RESISTOR 9.76K 1% RN60D	83	6448-5119-7		1					R12
RESISTOR 10K 1% RN60D	84	6448-5170-0		3					R1, 2, 6
RESISTOR 10.2K 1% RN60D	85	6405-4160-0		1					R13
RESISTOR 20K 1% RN60D	86	6448-5160-0		1					R5
RESISTOR 10K 1% 1/8W	87	6448-2123-0		2					R30, R51
CAPACITOR 1000 µf 10V	88	6510-0240-0		1					C49 Mallory VTL1000S10
CAPACITOR 100 µf 25V	89	6505-0116-3		2					C40, 64
CAPACITOR 10 µf 25V	90	6960-0069-0		1					C63
CAPACITOR 0.1 µf Mylar	91	6517-1933-1		1					C56
CAPACITOR .001 µf Mylar	92	6960-0033-0		2					C18, 19
CAPACITOR 0.1 µf DIP	93	6505-9420-0		67					Bypass caps
CAPACITOR 0.1 µf MONO	94	6960-0030-0		1					C78
CAPACITOR 0.01 DISC	95	6503-1643-0		1					C58
CAPACITOR 0.001 1kV	96	6503-1575-0		20					C77, 79-97

DRAWING NO.	REV.	CHK. DATE	APPV. DATE	AIRCO Temescal PARTS LIST	7/7	TOTAL NO. OF UNITS	ENG. RELEASE BY - DATE	PROJ./WORK ORDER NO.
0511-0435-0	2							
DWG. TITLE CPU PC BOARD ASSEMBLY							PLANNER - DATE	NEXT ASS'Y W/O NO.
JOB TITLE VERSA VAC				NEXT ASS'Y			ACCT. / PLANN. / STORES / STAGE / I.C. / OTHER	

DESCRIPTION	ITEM	PART/STOCK NO.	SUB	UNIT QUAN.	TOTAL REQ.	STORES ISS.	STORES CODE	DEC. FT.	P.O. NO. - VENDOR - DATE REMARKS - NOTES - MISC.
CAPACITOR 27 pf DISC	97	6503-0350-0		2					C43, C44
	98								
CRYSTAL 4.0 MHZ	99	6960-0090-0		1					XTAL, SARONIX NMP040MHZ
INDUCTOR 47 µH	100	6054-0047-0		1					L1
	101								
CONNECTOR 3M, 10 PT HEADER	102	6047-0009-1		1					J1
CONNECTOR 3M, 26 PT HEADER	103	6047-0008-0		2					J3, J4
CONNECTOR 3M, 34 PT HEADER	104	6047-0005-1		1					J5
CONNECTOR 3M, 50 PT HEADER	105	6047-0009-0		1					J2
CONNECTOR 6 PT AMP 1-380999-0	106	6047-0316-0		1					J6
	107								
JUMPERS, SAE RSR2610-2B	108	6047-2610-0		6					JB1 - JB6 B
TEST POINT, AMP 87224-8	109	6047-7724-8		1					DATA BUS 0-7
TEST POINT, AMP 87224-3	110	6047-7724-3		6					JB1 - JB6 B
TEST POINT, AMP 87224-1	111	6047-7724-1		19					TP1 - TP7 MISC. TEST POINTS

DESCRIPTION	ITEM	PART NO.	SUB ASSY	QTY.

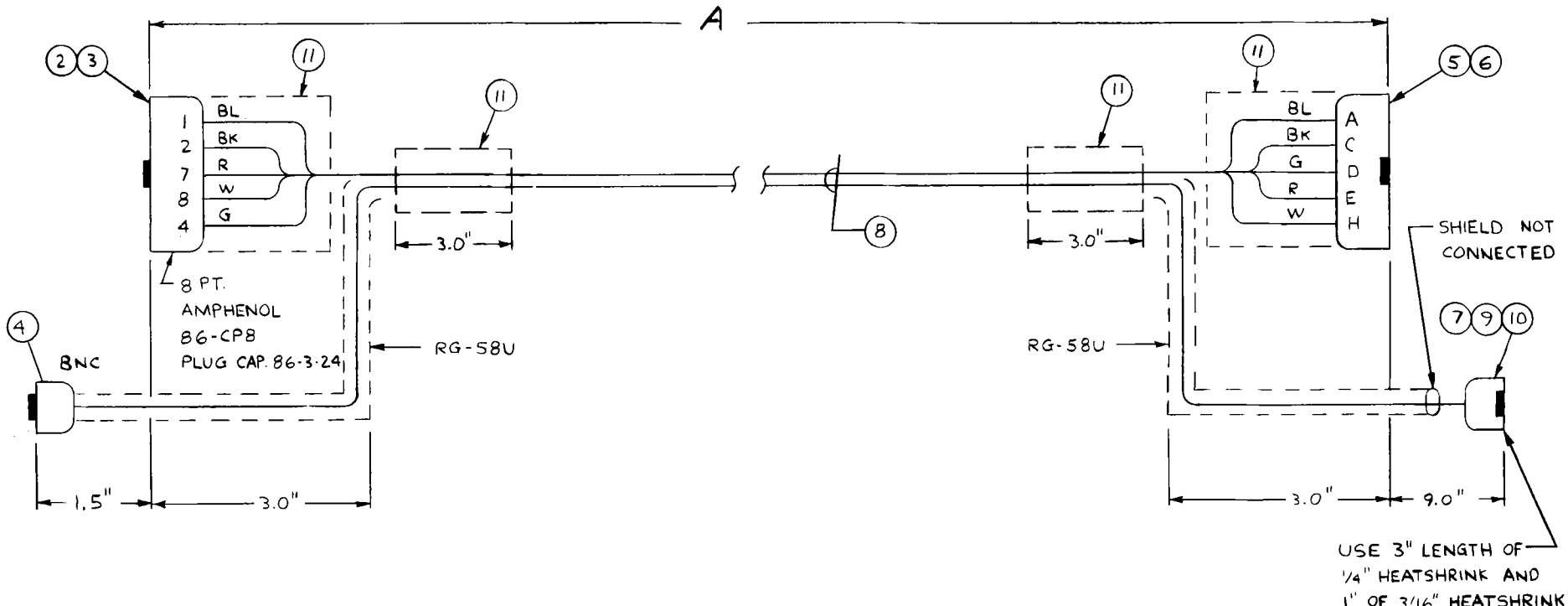

NOTE:
ITEM 11 IS 1/2" DIA. HEATSHRINK USED TO BOND CABLE ENDS.

P/N	A	
-0	12.0'	
-1	20.0'	
-2	30.0'	1
-3	40.0'	1
-4	60.0'	1

REV.	DESCRIPTION	BY	DATE	APP'VD
2	ITEM 6 P/N WAS 6047-8076-0	TMB	12-12-84	TM
1	ADDED -2, -3 & -4 TO TABULATION BOX	[illegible]	6/14/83	[illegible]
A	ADDED -1 AND TABULATION BOX	JS	4-22-82	RB

UNLESS OTHERWISE SPECIFIED
BREAK ALL EDGES | INTER. RADII
USED ON DWG. NO.
DO NOT SCALE DRAWING

FINISH √ | TOLERANCE XXX ± ANG ± XX ± X ± 0.25 | CHAMFER ENDS OF ALL SCREW THREADS 30° THREADS CLASS 2

AIRCO Temescal
A DIVISION OF AIRCO, INC.
Berkeley, California

DRAWN BY D. CAPLIN | DATE 10/2/81 | CHK BY RB | APP BY RB | SCALE NONE

VERSAVAC
ION GAUGE CABLE
ASSEMBLY

DRAWING NUMBER: SERIAL 511-8542 | SIZE | REV 2

PARTS LIST NO. 0511-8542-0 THRU -4 APPLIES 1

WARNING: MICRO FILM CHANGE CONTROL

DRAWING NO.	REV.	CHK. DATE	APPV. DATE	AIRCO Temescal (P) PARTS LIST	1/1	TOTAL NO. OF UNITS	ENG. RELEASE BY - DATE	PROJ./WORK ORDER NO.
0511-8542-0	2						PLANNER - DATE	NEXT ASS'Y W/O NO.
DWG. TITLE ION GAUGE CABLE ASSY.							ACCT. / PLANN. / STORES / STAGE / I.C. / OTHER	
JOB TITLE VERSA VAC				NEXT ASS'Y				

DESCRIPTION	ITEM	PART/STOCK NO.	SUB	UNIT QUAN.	TOTAL REQ.	STORES ISS.	STORES CODE	DEC. FT.	P.O. NO. - VENDOR - DATE REMARKS - NOTES - MISC.
ASSEMBLY 511-8542	1						REF		
CONNECTOR 8 PT. MALE	2	6047-0020-0		1					AMPHENOL 86-CP8
PLUG CAP	3	6047-2538-0		1					AMPHENOL 86-3-24
CONNECTOR KING KC59-123	4	6047-2476-0		1					
CONNECTOR WINCH. A-7S	5	6047-8100-0		1					IG TUBE
△ HOOD WINCH MRE - 20H13	6	6047-8076-2		1					ITEM 5
CONN., CAMBION 450-3378-01-04-10	7	6047-4500-0		1					IG TUBE COLLECTOR
CABLE 5x #16 GA & RG58U	8	6344-3500-0		12'.0					
HEATSHRINK TUBING 3/16"	9	6348-6018-0		0.1'					
HEATSHRINK TUBING 1/4"	10	6348-6025-0		0.25'					
HEATSHRINK TUBING 1/2"	11	6348-6050-0		1.0'					

DESCRIPTION	ITEM	PART NO.	SUB ASSY	QTY.

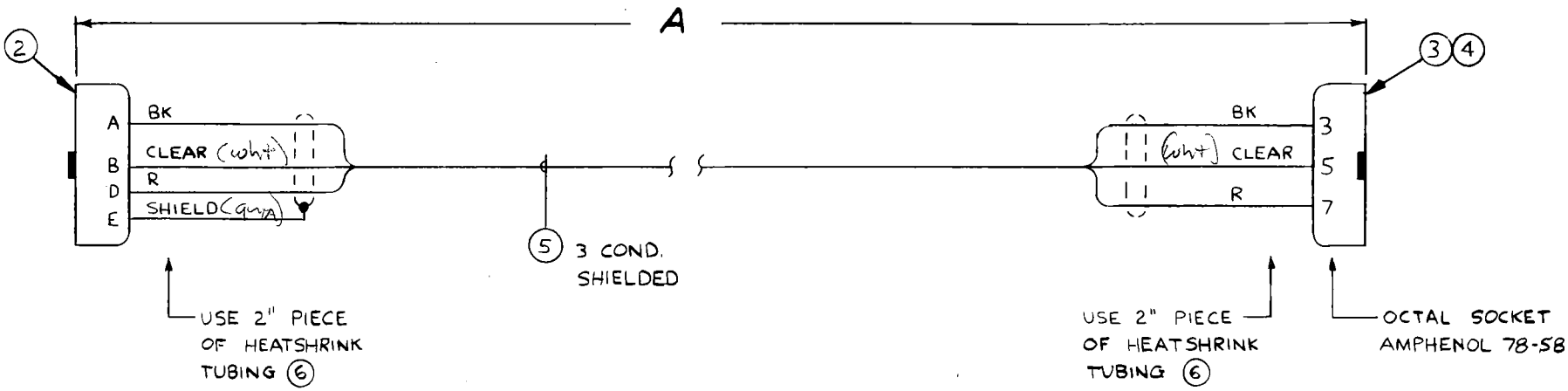

Modify 843/845 T/C Cable

1. Remove thermistor
2. cut Green Wire off
3. Move White wire from 7 to 5

P/N	A
-0	12.0'
-1	20.0'
-2	30.0' ⚠
-3	40.0' ⚠
-4	60.0' ⚠

REV.	DESCRIPTION	BY	DATE	APP'VD
2	ITEM 5 WAS #18 ON-0&-1-DCR 12528	JS	6.20.84	[illegible]
1	ADDED - 2,3 & 4 TO TABULATION BOX	[illegible]	6/14/83	[illegible]
A	ADDED -1 AND TABULATION BOX	JS	4.28.82	RB

UNLESS OTHERWISE SPECIFIED

BREAK ALL EDGES | INTER. RADII | USED ON DWG. NO. | DO NOT SCALE DRAWING

FINISH √ | TOLERANCE XXX ± ANG ± XX ± X ± | CHAMFER ENDS OF ALL SCREW THREADS 30° THREADS CLASS 2

AIRCO Temescal — A DIVISION OF AIRCO, INC. Berkeley, California

DRAWN BY D. CAPLIN | DATE 10/2/81 | CHK BY RB | APP BY RB | SCALE NONE

VERSAVAC

T.C. CABLE ASSY.

DRAWING NUMBER: SERIAL 511-8552 | SIZE 2 | REV 2

PARTS LIST NO. 0511-8552 -0 THRU -4 APPLIES ⚠

DRAWING NO.	REV.	CHK. DATE	APPV. DATE	AIRCO Temescal PARTS LIST	1/1	TOTAL NO. OF UNITS	ENG. RELEASE BY - DATE	PROJ./WORK ORDER NO.
0511-8552-0	2							

DWG. TITLE	T.C. Cable Assembly		PLANNER - DATE	NEXT ASS'Y W/O NO.
JOB TITLE	VersaVac	NEXT ASS'Y		

ACCT.	PLANN.	STORES	STAGE	I.C.	OTHER

DESCRIPTION	ITEM	PART/STOCK NO.	SUB	UNIT QUAN.	TOTAL REQ.	STORES ISS.	STORES CODE	DEC. FT.	P.O. NO. - VENDOR - DATE REMARKS - NOTES - MISC.
ASSEMBLY 511-8552	1								
CONNECTOR AMPHENOL 126-217	2	6047-9217-0		1					
CONNECTOR AMPHENOL 78-S8	3	6047-0058-0		1					
PLUG CAP AMPHENOL 86-3-24	4	6047-2538-0		1					
2 CABLE 3 COND SHIELDED	5	6338-7720-0		12.0'					
HEATSHRINK TUBING 3/8"		6348-6037-6		0.33'					

DESCRIPTION			ITEM	PART NO.	SUB ASSY	QTY.
CONNECTOR	SAE	SCU22D/1-2	2	6047-8040-0		1
HOOD	SAE	8031-22	3	6047-8031-0		1
KEY	SAE	057-002-0000	4	6047-8028-0		2

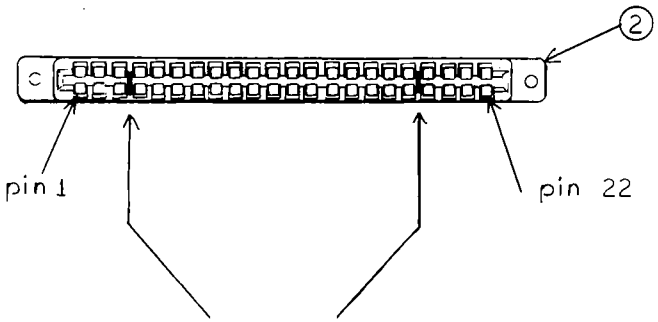

install polarizing keys (4) between pins 3 & 4 and between pins 18 & 19.

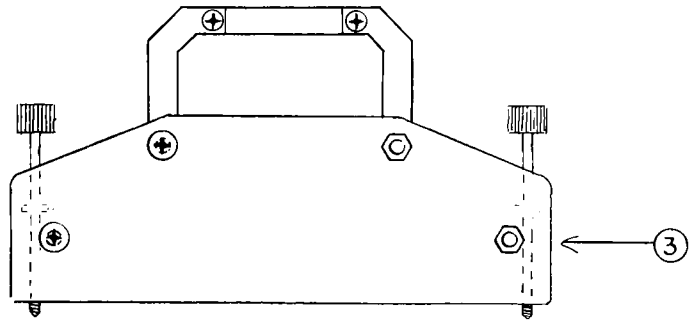

HOOD ASSEMBLY

REV.	DESCRIPTION	BY	DATE	APP'VD

UNLESS OTHERWISE SPECIFIED

BREAK ALL EDGES | INTER. RADII | USED ON DWG. NO. | DO NOT SCALE DRAWING

FINISH √ | TOLERANCE XXX ± ANG ± XX ± X ± | CHAMFER ENDS OF ALL SCREW THREADS 30° THREADS CLASS 2 | (3) AIRCO Temescal A DIVISION OF AIRCO, INC. Berkeley, California

DRAWN BY R. BROOKS | DATE 12/4/81 | CHK BY RB | APP BY RB | SCALE

Versa Vac

SETPOINT CONNECTOR ASSEMBLY

DRAWING NUMBER: SERIAL SIZE REV — 511-9522

PARTS LIST NO. 0511-9522-0 APPLIES

WARNING: MICRO FILM CHANGE CONTROL

DRAWING NO.	REV.	CHK. DATE	APPV. DATE	AIRCO Temescal PARTS LIST	1/1	TOTAL NO. OF UNITS	ENG. RELEASE BY - DATE	PROJ./WORK ORDER NO.
0511-9522-0								
DWG. TITLE SET POINT CONNECTOR ASSEMBLY							PLANNER - DATE	NEXT ASS'Y W/O NO.
JOB TITLE VERSAVAC				NEXT ASS'Y			ACCT. / PLANN. / STORES / STAGE / I.C. / OTHER	

DESCRIPTION	ITEM	PART/STOCK NO.	SUB	UNIT QUAN.	TOTAL REQ.	STORES ISS.	STORES CODE	DEC. FT.	P.O. NO. - VENDOR - DATE REMARKS - NOTES - MISC.
ASSEMBLY	1						REF		
CONNECTOR SAE SCU22D/1-2	2	6047-8040-0		1					
HOOD SAE 8031-22	3	6047-8031-0		1					
POLARIZING KEY SAE 057-002-0000	4	6047-8028-0		2					

DESCRIPTION			ITEM	PART NO.	SUB ASSY	QTY.
CONNECTOR	SAE	SCU22D/1-2	2	6047-8040-0		1
HOOD	SAE	8031-22	3	6047-8031-0		1
KEY	SAE	057-002-0000	4	6047-8028-0		3
CBC CLAMP	SAE	002B019	5	6048-0004-0		1

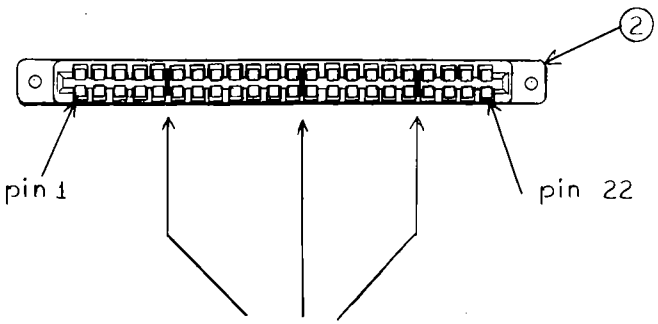

install polarizing keys 4
between pins 5 & 6,
between pins 12 & 13, and
between pins 18 & 19

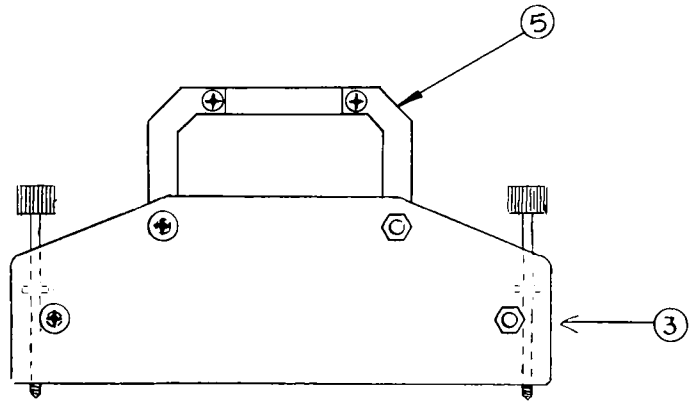

HOOD ASSEMBLY

REV.	DESCRIPTION	BY	DATE	APP'VD
A	ADDED ITEM #5 TO P/L & DWG. DCR # 10908	MF	4-19-84	RB

UNLESS OTHERWISE SPECIFIED

BREAK ALL EDGES | INTER. RADII

USED ON DWG. NO.

DO NOT SCALE DRAWING

FINISH √

TOLERANCE
XXX ± ANG ±
XX ± X ±

CHAMFER ENDS OF ALL SCREW THREADS 30° THREADS CLASS 2

AIRCO Temescal
A DIVISION OF AIRCO, INC.
Berkeley, California

DRAWN BY R. BROOKS | DATE 12/4/81 | CHK BY RB | APP BY RB | SCALE

Versa Vac

DRAWING NUMBER

SERIAL	SIZE	REV
511-9532		A

DATA CONNECTOR ASSEMBLY

PARTS LIST NO. 0511-9532-0 APPLIES

WARNING: MICRO [illegible] CONTROL

DRAWING NO.	REV.	CHK. DATE	APPV. DATE	AMCO Temescal PARTS LIST	1/1	TOTAL NO. OF UNITS	ENG. RELEASE BY - DATE	PROJ./WORK ORDER NO.
0511-9532-0	A							
DWG. TITLE DATA CONNECTOR ASSEMBLY							PLANNER - DATE	NEXT ASS'Y W/O NO.
JOB TITLE VERSAVAC				NEXT ASS'Y			ACCT. / PLANN. / STORES / STAGE / I.C. / OTHER	

DESCRIPTION	ITEM	PART/STOCK NO.	SUB	UNIT QUAN.	TOTAL REQ.	STORES ISS.	STORES CODE	DEC. FT.	P.O. NO. - VENDOR - DATE REMARKS - NOTES - MISC.
ASSEMBLY	1						REQ		
CONNECTOR SAE SCU22D/1-2	2	6047-8040-0		1					
HOOD SAE 8031-22	3	6047-8031-0		1					
POLARIZING KEY SAE 057-002-0000	4	6047-8028-0		3					
CBC CLAMP SAE 002B019	5	6048-0004-0		1					

DESCRIPTION	ITEM	PART NO.	SUB ASSY	QTY.

SETPOINT CONNECTOR INTERFACE

		PIN		PIN		
TC1 SP 1	N.O.	1		A		
		2		B	TC1 SP1	COM.
		3		C		N.C.
TC1 SP 2	N.O.	4		D	TC1 SP2	COM.
		5		E		N.C.
TC2 SP 1	N.O.	6		F	TC2 SP1	COM.
		7		H		N.C.
TC2 SP 2	N.O.	8		J	TC2 SP2	COM.
		9		K		N.C.
TC3 SP	N.O.	10		L	TC3 SP	COM.
		11		M		N.C.
TC4 SP	N.O.	12		N	TC4 SP	COM.
		13		P		N.C.
TC5 SP	N.O.	14		R	TC5 SP	COM.
		15		S		N.C.
IG #1 FIL. IS ON	N.O.	16		T	IG #1 FIL. IS ON	COM.
		17		U		N.C.
IG SP1	N.O.	18		V	IG SP1	COM.
		19		W		N.C.
IG SP2	N.O.	20		X	IG SP2	COM.
		21		Y		N.C.
		22		Z		

NOTE :

N.O. = NORMALLY OPEN CONTACT

N.C. = NORMALLY CLOSED CONTACT

COM. = COMMON CONTACT

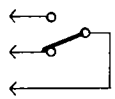

REV.	DESCRIPTION	BY	DATE	APP'VD

UNLESS OTHERWISE SPECIFIED

BREAK ALL EDGES | INTER. RADII | USED ON DWG. NO. | DO NOT SCALE DRAWING

FINISH √ | TOLERANCE XXX ± ANG ± XX ± X ± | CHAMFER ENDS OF ALL SCREW THREADS 30° THREADS CLASS 2

AIRCO Temescal — A DIVISION OF AIRCO, INC. Berkeley, California

DRAWN BY R. BROOKS | DATE 1/18/82 | CHK BY | APP BY RB | SCALE

VERSAVAC

REAR PANEL I/O — SETPOINT CONNECTOR

DRAWING NUMBER: SERIAL | SIZE | REV — 605-0243

PARTS LIST NO. | APPLIES

DESCRIPTION	ITEM	PART NO.	SUB ASSY	QTY.

DATA CONNECTOR INTERFACE

	PIN		PIN		
ANALOG PRESSURE OUTPUT	1		A	ANALOG GROUND (28 V.) COMMON	
+ 28 VDC SOURCE	2		B		
FILAMENT GO ON (SEE NOTE 1)	3	INPUTS (POS.)	C	FILAMENT GO ON	INPUTS (NEG.)
FILAMENT DISABLE (SEE NOTE 1)	4		D	FILAMENT DISABLE	
REQ. RATE OF CHANGE	5		E	REQ. RATE OF CHANGE	
REQ. PASCAL / $\overline{\text{TORR}}$	6		F	REQ. PASCAL / $\overline{\text{TORR}}$	
IG # 1 IS ON	7	OUTPUTS (POS.)	H	IG # 1 IS ON	OUTPUTS (NEG.)
DATA IS INCREASING	8		J	DATA IS INCREASING	
IG # 2 IS ON	9		K	IG # 2 IS ON	
+ DP/DT EXCEEDED	10		L	+ DP/DT EXCEEDED	
B.C.D. EXPONENT 8.	11		M	8. EXPONENT B.C.D.	
4.	12		N	4.	
2.	13		P	2.	
1.	14		R	1.	
MANTISSA 80.	15		S	80. MANTISSA	
40.	16		T	40.	
20.	17		U	20.	
10.	18		V	10.	
8.	19		W	8.	
4.	20		X	4.	
2.	21		Y	2.	
1.	22		Z	1.	

NOTES:

1. WHEN JB5 IS IN, THE REMOTE TUBE SELECT OPTION IS ACTIVE AND THE FILAMENT CONTROL INPUTS ARE AS FOLLOWS:

   FILAMENT GO ON = FILAMENT 1 GO ON

   FILAMENT DISABLE = FILAMENT 2 GO ON

TYPICAL INPUT

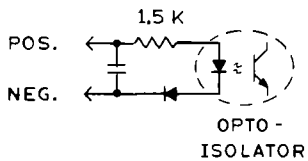

20-28 VDC BETWEEN THE POS. AND NEG. PINS MAKES THE INPUT ACTIVE.

TYPICAL OUTPUT

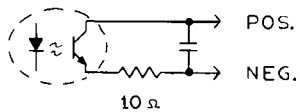

EACH OUTPUT IS ISOLATED MAX. USER APPLIED VOLTAGE IS 25 VDC.; SEE TIL-111 DATA SHEET.

REV.	DESCRIPTION	BY	DATE	APP'VD
A	ADDED NOTE 1	JS	6-25-82	MJL

UNLESS OTHERWISE SPECIFIED

BREAK ALL EDGES | INTER. RADII | USED ON DWG. NO. | DO NOT SCALE DRAWING

FINISH √ | TOLERANCE XXX ± ANG ± XX ± X ± | CHAMFER ENDS OF ALL SCREW THREADS 30° THREADS CLASS 2

AIRCO Temescal — A DIVISION OF AIRCO, INC. Berkeley, California

DRAWN BY R. BROOKS | DATE 1/19/82 | CHK BY MJL | APP BY RB | SCALE

VERSAVAC

REAR PANEL I/O — DATA CONNECTOR

DRAWING NUMBER: 605-0253 | SIZE | REV A

PARTS LIST NO. | APPLIES

DESCRIPTION	ITEM	PART NO.	SUB ASSY	QTY.

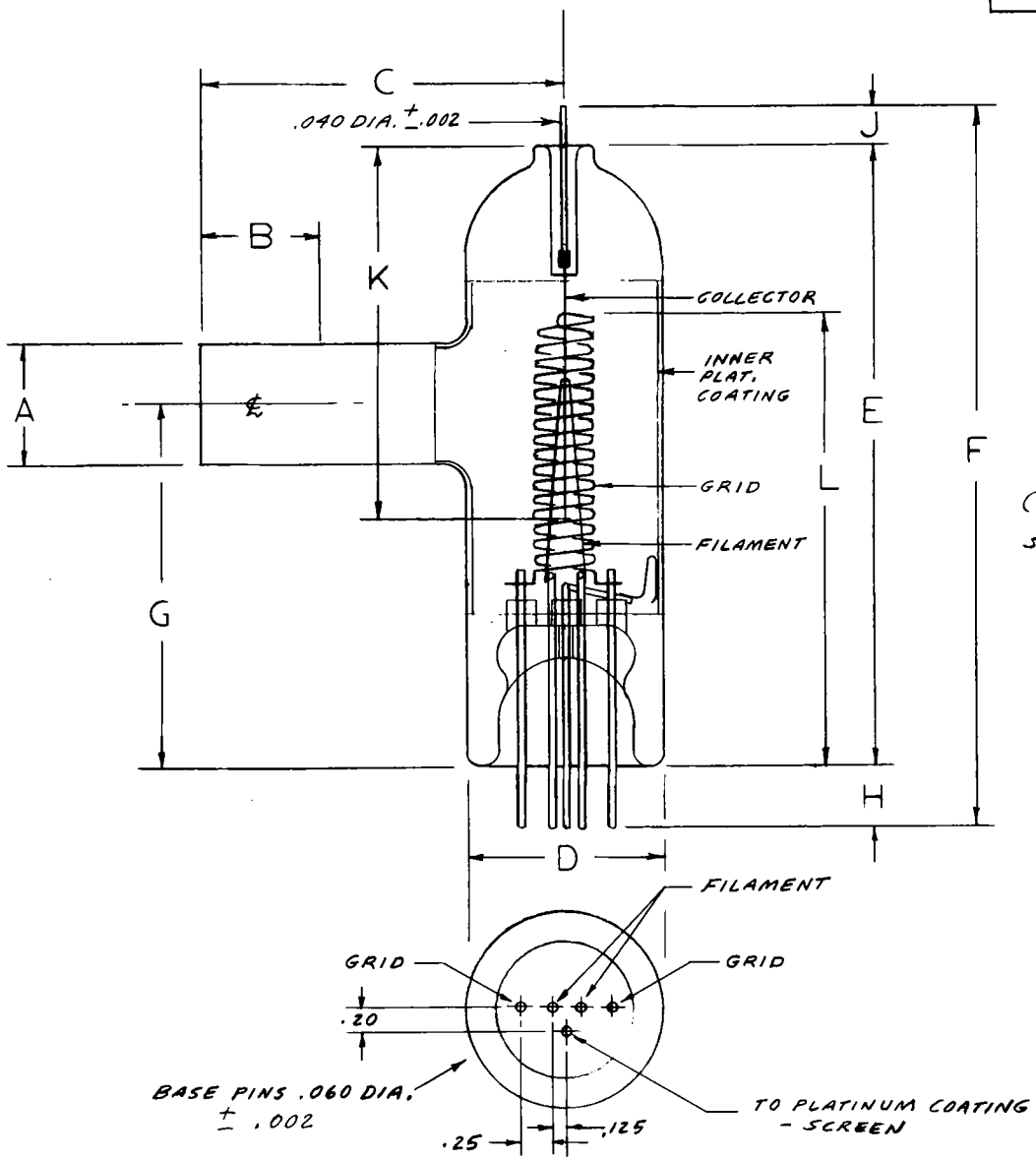

GRID STRUCTURE

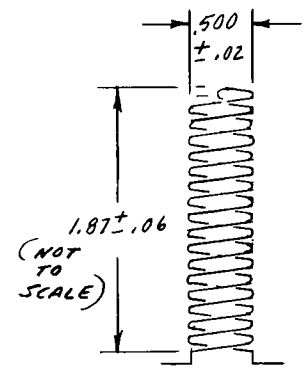

17 TURNS ± ½ TURN
.025 DIA. MOLYBDENUM WIRE.

A	.75 DIA ± .02	922 A
A	1.000 DIA. ± .02	922 B
B	1.00 MIN.	
C	3.00 ± .12	
D	1.63 DIA. ± .12	
E	5.12 ± .12	
F	5.93 ± .35	
G	3.00 ± .12	
H	.5 ± .12	
J	.312 ± .06	
K	3.12 ± .12	
L	3.87 ± .12	

MODEL 922 B PART # 9999-0030-0

REV.	DESCRIPTION	BY	DATE	APP'VD

UNLESS OTHERWISE SPECIFIED
BREAK ALL EDGES | INTER. RADII
USED ON DWG. NO.
DO NOT SCALE DRAWING

FINISH √ | TOLERANCE XXX ± ANG ± XX ± X ± | CHAMFER ENDS OF ALL SCREW THREADS 30° THREADS CLASS 2

AIRCO Temescal
A DIVISION OF AIRCO, INC.
Berkeley, California

DRAWN BY V. BURGETT | DATE 3/14/82 | CHK BY RB | APP BY RB | SCALE FULL

MODEL 922 A ION GAUGE TUBE
MODEL 922 B ION GAUGE TUBE
Broad Range

DRAWING NUMBER
SERIAL SIZE REV
605-117 2

PARTS LIST NO. APPLIES

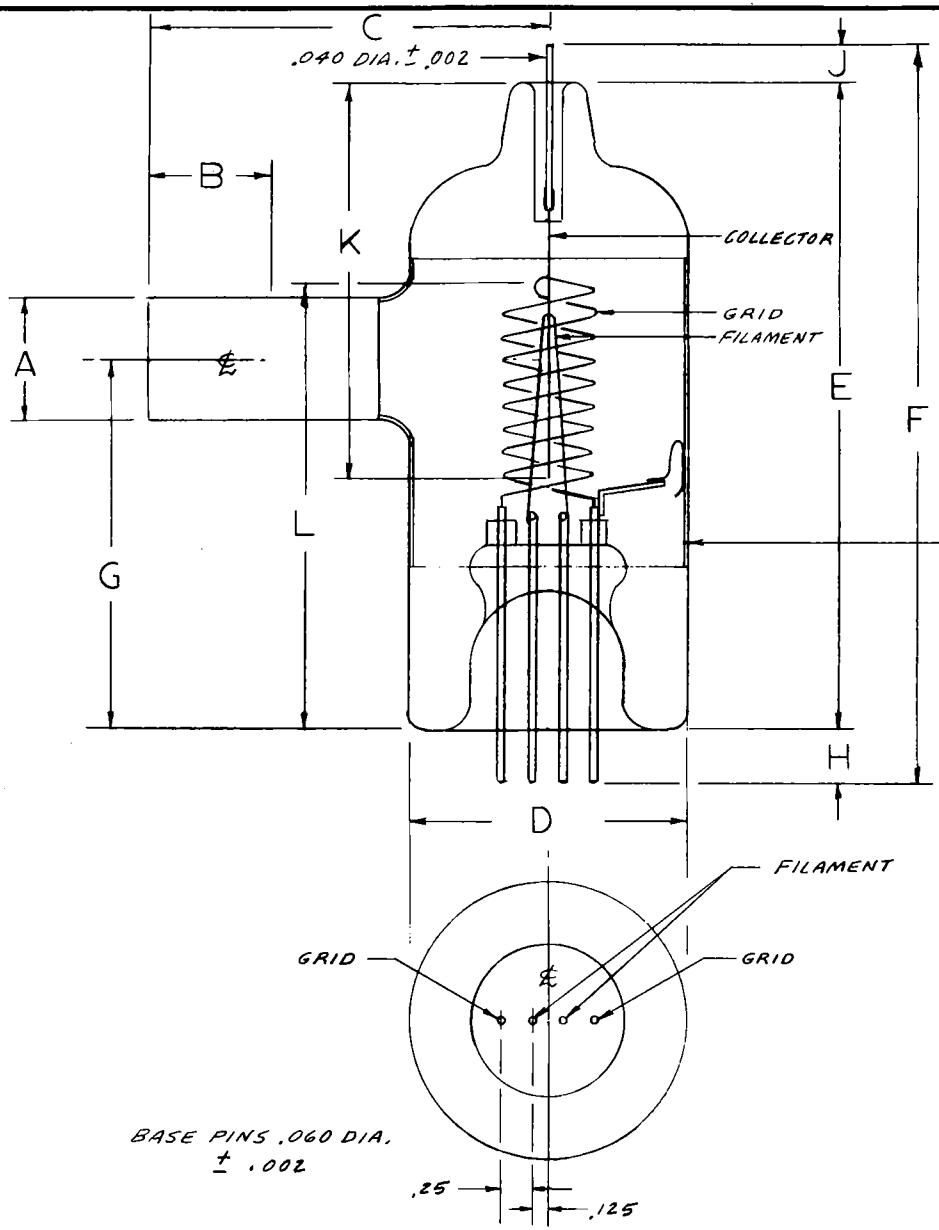

GRID STRUCTURE

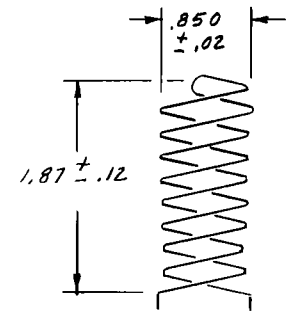

.025 DIA. MOLYBDENUM WIRE

DESCRIPTION	ITEM	PART NO.	SUB ASSY	QTY.	

924 A	A	.75 DIA. ± .02
924 B	A	1.00 DIA. ± .02
	B	1.00 MIN.
	C	3.25 ± .12
	D	2.25 DIA. ± .12
	E	5.25 ± .12
	F	6.00 ± .25
	G	3.00 ± .12
	H	.44 ± .06
	J	.312 ± .06
	K	3.12 ± .06
	L	3.87 ± .12

MODEL 924 A PART # 9999-0010-2
MODEL 924 B PART # 9999-0020-0

REV.	DESCRIPTION	BY	DATE	APP'VD

UNLESS OTHERWISE SPECIFIED
BREAK ALL EDGES | INTER. RADII
USED ON DWG. NO.
DO NOT SCALE DRAWING

FINISH √ | TOLERANCE XXX ± ANG ± XX ± X ± | CHAMFER ENDS OF ALL SCREW THREADS 30° THREADS CLASS 2

AIRCO Temescal
A DIVISION OF AIRCO, INC.
Berkeley, California

DRAWN BY V. BURGETT | DATE 3/4/82 | CHK BY RB | APP BY RB | SCALE FULL

MODEL 924 A ION GAUGE TUBE
MODEL 924 B ION GAUGE TUBE
Bayard-Alpert

DRAWING NUMBER SERIAL SIZE REV
605-118 2

PARTS LIST NO. APPLIES

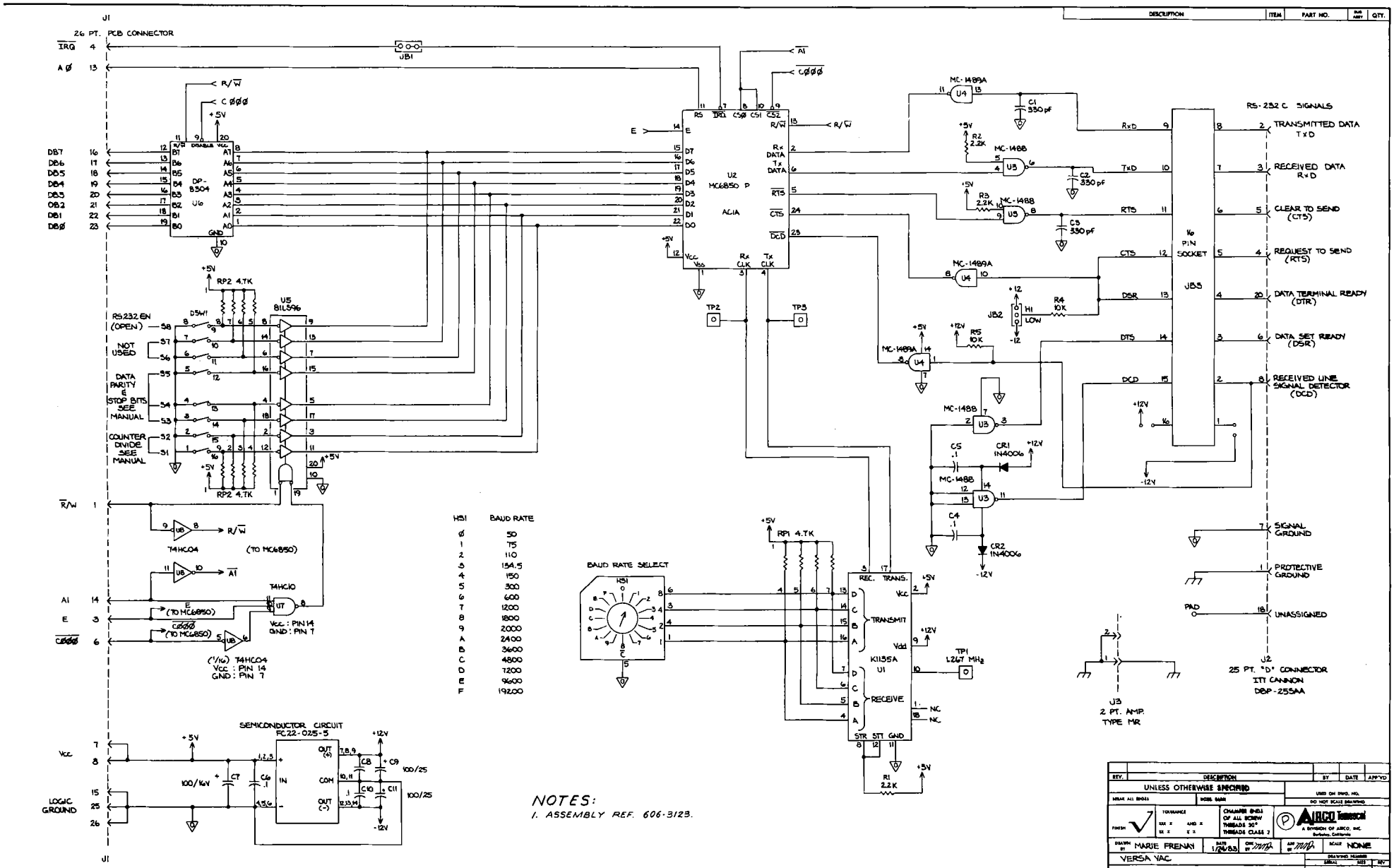
J1
26 PT. PCB CONNECTOR
IRQ 4
A Ø 13
JB1
R/W
C ØØØ
+5V
DB7 16
DB6 17
DB5 18
DB4 19
DB3 20
DB2 21
DB1 22
DBØ 23
DP-8304 U6
U2 MC6850 P ACIA
E
RS
IRQ
CSØ
CS1
CS2
RX DATA
TX DATA
RTS
CTS
DCD
RX CLK
TX CLK
Vcc
Vss
TP2
TP3
RS232 EN (OPEN) 58
NOT USED 57 56
DATA PARITY & STOP BITS SEE MANUAL 55 54 53
COUNTER DIVIDE SEE MANUAL 52 51
DSW1
RP2 4.7K
U5 81LS96
T4HC04
(TO MC6850)
T4HC10
Vcc : PIN 14
GND : PIN 7
(1/6) T4HC04
Vcc : PIN 14
GND : PIN 7
A1 14
E 3
CØØØ 6
Vcc 7 8
LOGIC GROUND 15 25 26
SEMICONDUCTOR CIRCUIT FC22-025-5
IN
OUT (+)
COM
OUT (-)
100/16V
C7
C6 .1
C8
C9 100/25
C10 .1
C11 100/25
+12V
-12V
BAUD RATE SELECT
HSI
BAUD RATE
Ø 50
1 75
2 110
3 154.5
4 150
5 300
6 600
7 1200
8 1800
9 2000
A 2400
B 3600
C 4800
D 7200
E 9600
F 19200
RP1 4.7K
REC. TRANS.
TRANSMIT
RECEIVE
K1135A U1
Vdd
STR STT GND
TP1 1.267 MHz
R1 2.2K
NC
MC-1489A U4
MC-1488 U3
C1 330 pF
C2 330 pF
C3 330 pF
R2 2.2K
R3 2.2K
R4 10K
R5 10K
JB2
HI
LOW
C5 .1
C4 .1
CR1 1N4006
CR2 1N4006
RxD
TxD
RTS
CTS
DSR
DTR
DCD
16 PIN SOCKET JB3
RS-232 C SIGNALS
TRANSMITTED DATA TxD
RECEIVED DATA RxD
CLEAR TO SEND (CTS)
REQUEST TO SEND (RTS)
DATA TERMINAL READY (DTR)
DATA SET READY (DSR)
RECEIVED LINE SIGNAL DETECTOR (DCD)
SIGNAL GROUND
PROTECTIVE GROUND
PAD
UNASSIGNED
J2
25 PT. "D" CONNECTOR
ITT CANNON
DBP-255AA
J3
2 PT. AMP.
TYPE MR
NOTES:
1. ASSEMBLY REF. 606-3123.
UNLESS OTHERWISE SPECIFIED
DRAWN BY MARIE FRENAN
DATE 1/26/83
SCALE NONE
VERSA VAC
RS-232C I/F PC BOARD
606-3094
AIRCO Transducer
A DIVISION OF AIRCO, INC.
Berkeley, California

DESCRIPTION	ITEM	PART NO.	SUB ASSY	QTY.

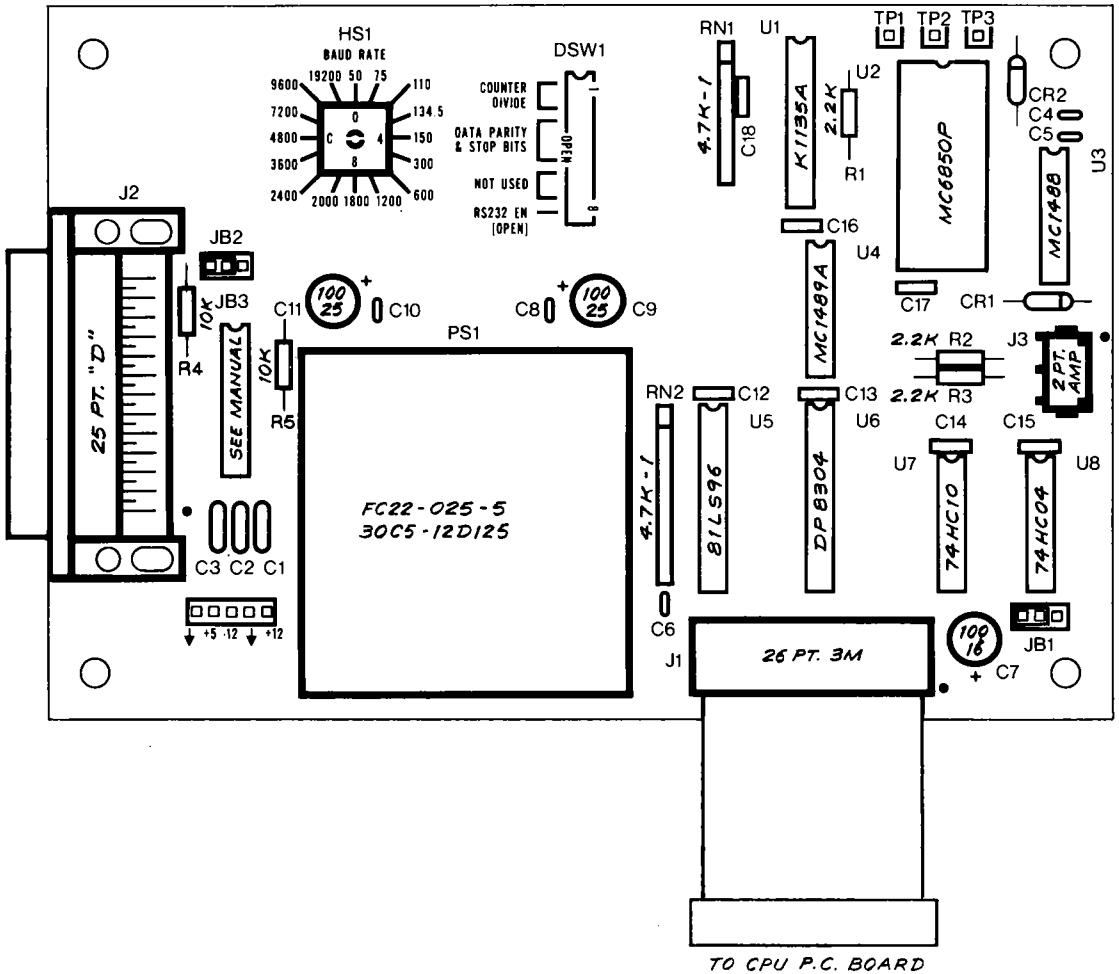

NOTES: UNLESS OTHERWISE SHOWN

1. SCHEMATIC REF. 606-3094.
2. RESISTOR: $\frac{1}{4}$W, 5%.
3. CAPACITOR: 0.1/50V (21)
4. CAPACITOR: 330pF (22)
5. CAPACITOR: 0.1/50V (20)
6. DIODE: 1N4006 (11)
7. TEST POINT: AMP 87224-1 (23)
8. JB1, JB2: AMP 87224-3 (24)

REV.	DESCRIPTION	BY	DATE	APP'VD

UNLESS OTHERWISE SPECIFIED

BREAK ALL EDGES | INTER. RADII | USED ON DWG. NO. | DO NOT SCALE DRAWING

FINISH | TOLERANCE XXX ± ANG ± XX ± X ± | CHAMFER ENDS OF ALL SCREW THREADS 30° THREADS CLASS 2

AIRCO Temescal — A DIVISION OF AIRCO, INC. Berkeley, California

DRAWN BY JULIE STEPHENS | DATE 2/17/83 | CHK BY | APP BY | SCALE 2:1

VERSAVAC

RS232C INTERFACE P.C. BOARD ASSEMBLY

DRAWING NUMBER: 606-3123 | SERIAL | SIZE | REV

PARTS LIST NO. | APPLIES

WARNING: MICRO FILM [illegible]

JUN 16 1983

DRAWING NO.	REV.	CHK. DATE	APPV. DATE	ARCO Temescal PARTS LIST	1/3	TOTAL NO. OF UNITS	ENG. RELEASE BY - DATE	PROJ./WORK ORDER NO.
0606-3123-0		2/10/83 MHJ						
DWG. TITLE RS232C I/F PC BOARD ASSY							PLANNER - DATE	NEXT ASS'Y W/O NO.
JOB TITLE VERSAVAC				NEXT ASS'Y			ACCT. / PLAN J. / STORES / STAGE / I.C. / OTHER	

DESCRIPTION	ITEM	PART/STOCK NO.	SUB	UNIT QUAN.	TOTAL REQ.	STORES ISS.	STORES CODE	DEC. FT.	P.O. NO. - VENDOR - DATE REMARKS - NOTES - MISC.
ASSEMBLY 606-3123	1111			Ø					
SCHEMATIC 606-3094	1112			Ø					
ARTWORK 606-3103	1113			Ø					
PC BOARD FABRICATION	1	0606-3113-0		1					
CABLE ASSEMBLY	2	0606-5992-0	X	1					J1
IC K1135A Motorola	3	6960-0034-0		1					U1
IC MC6850CP	4	6844-6850-1		1					U2
IC MC1488P	5	6844-0028-0		1					U3
IC MC1489AP	6	6844-0027-0		1					U4
IC 81LS96	7	6844-8196-0		1					U5
IC DP8304BN	8	6844-8304-0		1					U6
IC MC74HC10	9	6844-0025-0		1					U7
IC MC74HC04	10	6844-0026-0		1					U8
DIODE 1N4006	11	6838-9410-0		2					CR1, CR2
POWER SUPPLY FC22-025-5	12	6024-0015-0		1					PS1
SWITCH DIP GRAYHILL 76SB08	13	6156-0760-8		1					DSW1

DRAWING NO.	REV.	CHK. DATE	APPV. DATE	AIRCO Temescal PARTS LIST	2/3	TOTAL NO. OF UNITS	ENG. RELEASE BY - DATE	PROJ./WORK ORDER NO.
0606-3123-0								
DWG. TITLE RS232 I/F PC BOARD ASSEMBLY							PLANNER - DATE	NEXT ASS'Y W/O NO.
JOB TITLE VERSAVAC				NEXT ASS'Y			ACCT. / PLAN. / STORES / STAGE / I.C. / OTHER	

DESCRIPTION	ITEM	PART/STOCK NO.	SUB	UNIT QUAN.	TOTAL REQ.	STORES ISS.	STORES COD.	DEC. FT.	P.O. NO. - VENDOR - DATE REMARKS - NOTES - MISC.
RESISTOR 2.2K 1/4W 5%	14	6404-4631-0		3					R1 - R3
RESISTOR 10K 1/4W 5%	15	6404-4654-0		2					R4, R5
RESISTOR PACK 4.7K 764-1-R4.7K	16	6400-0016-0		1					RP1
RESISTOR PACK 4.7K MSP10C01-472G	17	6400-0027-0		1					RP2
CAPACITOR 100 µf 25V	18	6505-0116-3		2					C9, C11
CAPACITOR 100 µf 16V	19	6505-0116-0		1					C7
CAPACITOR 0.1 µf 50V MONO	20	6960-0030-0		5					C4-C6, C8, C10
CAPACITOR 0.1 µf DIP	21	6505-9420-0		7					C12-C18
CAPACITOR 330 pf 1KV DISC	22	6503-0323-0		3					C1-C3
TEST POINT 1 PIN AMP 87224-1	23	6047-7724-1		3					TP1-TP3
TEST POINT 3 PIN AMP 87224-3	24	6047-7724-3		2					JB1-JB2
TEST POINT 5 PIN AMP 87224-5	25	6047-7224-5		1					T4-T8
JUMPER SAE RSR2610-2B	26	6047-2610-0		2					JB1, JB2
CONNECTOR 25 PT D ITT DBP-255AA	27	6047-7420-0		1					J2
CONNECTOR 2 PT AMP 350209-1	28	6047-0302-0		1					J3
ADAPTER AUGAT 616-D65	29	6844-0616-0		1					JB3
SWITCH HEX EECO 2300576B	30	6156-0025-0		1					HS1

DRAWING NO.	REV.	CHK. DATE	APPV. DATE	AIRCO Temescal **PARTS LIST**	3/3	TOTAL NO. OF UNITS	ENG. RELEASE BY - DATE	PROJ./WORK ORDER NO.
0606-3123-0								
DWG. TITLE RS232 I/F PC BOARD ASSEMBLY							PLANNER - DATE	NEXT ASS'Y W/O NO.
JOB TITLE VERSAVAC				NEXT ASS'Y			ACCT. / PLANN. / STORES / STAGE / I.C. / OTHER	

DESCRIPTION	ITEM	PART/STOCK NO.	SUB	UNIT QUAN.	TOTAL REQ.	STORES ISS.	STORES CODE	DEC. FT.	P.O. NO. - VENDOR - DATE REMARKS - NOTES - MISC.
IC SOCKET 16 PT	31	6844-9316-0		1					JB3

SECTION 8

APPENDIX: RS232C INTERFACE AND VERSAVAC PROTOCOL

8.1 INTRODUCTION

The RS232C interface allows the VersaVac gauges to be controlled by a computer. The VersaVac protocol allows control of set points, tube selection, tube on/off and degas functions.

8.2 THE VERSAVAC PROTOCOL

8.2.1 Description and Specifications

The VersaVac protocol provides complete control of the VersaVac gauges without complex communications. The commands consist of a letter command, followed by a two-digit code. The letter command indicates the function, i.e. READ/WRITE/SET/CLEAR and TEST. The two-digit code refers to the data which is being requested or acted on. All communications are in standard ASCII and are in upper case. All commands must be terminated by a line-feed or carriage return. (Line feeds are ignored by the VersaVac gauges but can be used for clarity when using a terminal.)

8.2.1.1 Definition of Commands

a)

Letter Command	Definition
T	TEST; request status. The VersaVac gauges will send status information
S	SET; start a function (on)
C	CLEAR; stop a function (off)
R	READ; read a value
W	WRITE; write a value to a set point

8.2.1.1 (continued)

b)

Number Command	Definition
10	TC1 pressure
11	TC1 set point 1
12	TC1 set point 2
20	TC2 pressure
21	TC2 set point 1
22	TC2 set point 2
30	TC3 pressure (VersaVac 5 gauge only)
31	TC3 set point (VersaVac 5 gauge only)
40	TC4 pressure (VersaVac 5 gauge only)
41	TC4 set point (VersaVac 5 gauge only)
50	TC5 pressure (VersaVac 5 gauge only)
51	TC5 set point (VersaVac 5 gauge only)
60	IG tube 1 (ON/OFF) and pressure
61	IG tube 1 set point 1
62	IG tube 1 set point 2
63	IG tube 1 sensitivity and mode
70	IG tube 2 (ON/OFF0 and pressure
71	IG tube 2 set point 1
72	IG tube 2 set point 2
73	IG tube 2 sensitivity and mode
80	IG rate of change
81	IG rate of change set point
90	degas ON/OFF
91	reserved for torr/pascal units (not in version 2.0 software)
92	set-point status
93	error status
94	software front panel lock
95	software reset

8.2.1.2 Structure of Commands

Symbol	Definition
Z	thermocouple or ionization tube number
X	most significant digit of the mantissa
Y	least significant digit of the mantissa
-	sign of the exponent
E	exponent
cr	carriage return
lf	line feed

8.2.1.3 Examples of VersaVac protocol commands are given below.

a) Thermocouple-related commands:

Code (to VersaVac gauges)	Response (from VersaVac gauges)	Comment
		For Z = 1 to 5:
RZ0cr	XY-E	Read TCZ pressure
RZ1cr	XY-E	Read TCZ set point 1
RZ2cr	XY-E	Read TCZ set point 2
WZ0XY-Ecr	?	Not valid (cannot write a pressure
WZ1XY-Ecr	=	Write TCZ set point 1; (make TCZ set point 1 equal to XY-E)

NOTE

For TC pressure of less than 1.0×10^{-3} torr (1 micron), the VersaVac gauge will return the value <1-3. For TC pressure greater than 1 torr (1000 microns), the VersaVac gauge will return the value >1-0.

C, S and T are not valid with thermocouple-related commands.

b) Ionization-tube-related commands:

Code (to VersaVac gauges)	Response (from VersaVac gauges)	Comment
RZ0cr	XY-E	Read tube Z pressure
RZ1cr	XY-E	Read tube Z set point 1
RZ2cr	XY-E	Read tube Z set point 2
WZ0cr	?	Not valid
WZ1XY-Ecr	=	Write to set point 1
WZ2XY-Ecr	=	Write to set point 2
SZ0cr	=	Gas go on; tube must already be on
C90cr	=	Degas go off
S94cr	=	Lock the front panel
R81cr	XY-E	Read rate of change set point
W81XY-E	=	Write rate of change set point

8.2.1.3 (continued)

NOTE
If the ionization gauge tube is off, the VersaVac gauge will return the value 00-0 for pressure.

T is not valid with ionization-tube-related commands.

c) Other commands:

Code (to VersaVac gauges)	Response (from VersaVac gauges)	Comment
S90cr	=	Degas go on; tube must already be on.
C90cr	=	Degas go off
S94cr	=	Lock the front panel (key in lock mode). Refer to section 8.2.2.2.
C94cr	=	Unlock the front panel Refer to section 8.2.2.2.
S95cr	=	Restart VersaVac gauges software

8.2.2 Operation

8.2.2.1 TEST commands. TEST commands are discussed in the following examples.

a) T92cr This command requests set-point information and other status information as described in the bit map below.

The VersaVac gauges will return 6 ASCII characters representing a HEX value 0 → F; they are sent from left to right (most significant bit (MSB) to least significant bit (LSB).

NOTE
The VersaVac gauge looks for a cr ($ØD) from the host as the input terminator. It responds to a command in one of three ways:

a) DATA, cr, lf, = ;	In response to R and T commands
b) cr, lf, = ;	In response to W, S, and C commands
c) ?, cr, lf, = ;	In response to an invalid command or a W command with out-of-range data

8.2.2.1 (continued)

```
                                        (cr lf =)
____ ____ ____ ____ ____ ____
|||| |||| |||| |||| |||| ||||'-Data is increasing
|||| |||| |||| |||| |||| |||'--Data is decreasing
|||| |||| |||| |||| |||| ||'---Rate of change exceeded
|||| |||| |||| |||| |||| |'----Degas is on
|||| |||| |||| |||| |||'------Softlock is on
|||| |||| |||| |||| ||'-------Prog=1/Lock=0 switch
|||| |||| |||| |||| |'--------in program
|||| |||| |||| |||| '---------Not used (always 0)
|||| |||| |||| ||||'----------Not used (always 0)
|||| |||| |||| |||'-----------Tube 1 is on
|||| |||| |||| ||'------------Tube 1 set point 1 is on
|||| |||| |||| |'-------------Tube 1 set point 2 is on
|||| |||| |||| '--------------Reserved for torr/pascal units
|||| |||| |||'----------------Tube 2 is on
|||| |||| ||'-----------------Tube 2 set point 1 is on
|||| |||| |'------------------Tube 2 set point 2 is on
|||| |||| '-------------------Tube type (0=924, 1=922)
|||| |||'----------------------TC1 set point 1
|||| ||'-----------------------TC1, set point 2
|||| |'------------------------TC2 set point 1
|||| '-------------------------TC2 set point 2
|||'---------------------------TC3 set point
||'----------------------------TC4 set point
|'-----------------------------TC5 set point
'------------------------------Not used (always 0)
```

Each of the above 4-bit patterns can take one of the following patterns. All characters transmitted over the RS232C interface are ASCII, and in the status information they represent HEX characters as follows:

HEX Value (ASCII)	Binary Value (Nibble)
0	0000
1	0001
2	0010
3	0011
4	0100
5	0101
6	0110
7	0111
8	1000
9	1001
A	1010
B	1011
C	1100
D	1101
E	1110
F	1111

8.2.2.1 (continued)

b) T93cr This command requests error status information. The errors are the same as those listed in table 6.1 (Diagnostic Messages). The E in front of the error codes is not sent as part of the status. A no-error condition is indicated by 00.

8.2.2.2 SET commands. The SET command allows functions to be set on or started. For example, to switch tube 1 on, issue the command S60cr; tube 1 will be selected (if not already selected) and the tube filament will be switched on. All of the normal interlocks for pressure will hold as described in section 3.1.

If tube 2 is on, the command will be ignored. In order to switch tube 1 on when tube 2 is on, tube 2 must first be switched off using the CLEAR command. The reverse is true in order to switch on tube 2.

The degas can be switched on using the command S90cr. One of the two tubes must be on and the pressure of the vacuum system must be as described in section 3.1.

The command S94cr locks the front panel. The computer can lock the filament on/off and the degas push buttons when the PROG/LOCK switch is in the LOCK position. Front panel keylock must be in the LOCK position. Software lock will be overridden by the front panel keylock.

Software reset can be accomplished by using the command S95cr. This command will tell the VersaVac gauges to act as if it were getting a POWER ON reset. The VersaVac gauges will initialize all output ports, check the RAM and EROM, test for valid set points and clear all scratch pad RAM. This command should be used only to try to clear an error condition or when doing a system reset.

8.2.2.3 The CLEAR command. The CLEAR command is used to switch off a function. The method of operation is similar to that used with the SET command, i.e., to switch tube 1 off, issue the command C60cr.

8.2.2.4 The READ command. The READ command is used to read pressure and set-point parameters. All the VersaVac gauge pressure and set points indicated on the front panel can be read by this command. The tube sensitivity and analog output mode can also be read.

8.2.2.5 The WRITE command. This command is used to program any of the VersaVac gauge set points. The set-point information must be in units of torr. The WRITE command can also set tube sensitivity and analog output mode. The sensitivity and analog output modes are described in section 3.2.

8.3 THE RS232C INTERFACE

8.3.1 Description and Specifications

The following parameters must be preset on the RS232C interface board (part number 0606-3123-0).

a) Baud rate. This can be from 50 to 19.2k baud. Use a small screwdriver to set the baud rate to that required by the host computer or terminal.

b) Counter divider. Set to divide by 16 or 64 (drawing 606-3123).

DSW1.2	DSW1.1	Counter divide select
0*	0	Divide by 1. Used with external synchronizer.
0	1	Divide by 16. Set as required by slave.
1	0	Divide by 64. Set as required by slave.
1	1	Not allowed.

c) Number of stop bits and parity (even or odd) (drawing 606-3123)

DSW1.5	DSW1.4	DSW1.3	Data length, parity & stop bits				
0	0	0	7 bits	+	even	+	2
0	0	1	7 bits	+	odd	+	2
0	1	0	7 bits	+	even	+	1
0	1	1	7 bits	+	odd	+	1
1	0	0	8 bits			+	2
1	0	1	8 bits			+	1
1	1	0	8 bits	+	even	+	1
1	1	1	8 bits	+	odd	+	1

*0=open, 1=closed

8.3.1 (continued)

d) RS232C enable: OPEN=enable, CLOSED=disabled. This switch can be used to stop communications without disconnecting the interface cable.

DSW1.8	RS232 enable/disable
0	enable (OPEN)
1	disable (CLOSED)
DSW1.7 DSW1.6	not used

e) JB1, JB2, JB3

JB1 Interrupt jumper	Must be installed between pins 1 and 2 (towards C7)
JB2 CTS/DSR	Pull up or pull down. Normally not installed. Use only if remote does not support CTS or DSR. Note: The VersaVac gauge will assume there is nothing connected to the RS232C interface if CTS/DSR is not active.
JB3	Consists of two pairs of holes on the board. Soldering a jumper on the left pair of JB3 will apply -12 volts to pin 1 of the DIP header. Soldering a jumper to the right pair of JB3 will apply +12 volts to pin 16 of the DIP header.

The above jumpers allow the user to bring ±12 volts to any of the pins on the DIP header.

8.3.2 Installation

The procedure for installing the RS232C interface in the VersaVac system is as follows:

a) Disconnect the power cord.

b) Remove the top and bottom covers of the VersaVac gauge.

c) Remove the hole plug from the DB25 hole in the rear panel.

d) Install four plastic standoffs on the CPU-board side of the chassis (front left-hand corner).

e) Mount the interface PC board on standoffs.

f) Route RS232C ribbon cable from the interface PC board through the slot between the front panel and the chassis to the rear panel.

g) Fasten the DB25 connector to the rear panel with the hardware which is provided.

h) Connect the green ground wire from the interface PC board to the mounting screw on the power transformer.

i) Plug the short 26-pin ribbon cable into the socket on the CPU board. Check to see that JB1, JB2 and JB3 are configured correctly.

j) Install new ROMs.

k) Put the top cover back on the VersaVac gauge (power-supply side).

m) Carefully check all connections.

n) Apply power to the VersaVac gauge.

CAUTION
High voltage will be present on the power transformer and the front panel bar graph.

8.3.2 (continued)

o) Verify that the VersaVac gauge functions.

p) Connect a terminal to the rear panel.

q) Apply power to the terminal.

r) Type R60cr. The VersaVac gauge should respond with 00-0
= .

s) If the VersaVac gauge does not return this response, check the Baud rate, parity, and the number of stop bits. If the VersaVac gauge does not understand, it will return a ? and then a =.

8.3.3 Operation

The RS232C interface board is normally configured as a master, and can be connected directly to a slave (terminal). If a different configuration is required, jumper block JB3 can be rewired to accept a variety of configurations (figures 8.1 and 8.2).

NOTE

For baud rates greater than 1200, full handshaking is required. The REQUEST TO SEND (RTS) signal must be toggled by the slave. The VersaVac gauges will toggle the CLEAR TO SEND (CTS) signal.

Refer to drawing 606-3094 for RS232C interface signals. Make sure that JB1 and JB2 are installed as shown in drawing 606-3123.

Figure 8.1 Examples of configurations for connecting the VersaVac to a terminal

a) This configuration implements the REQUEST TO SEND (RTS) signal from the terminal.

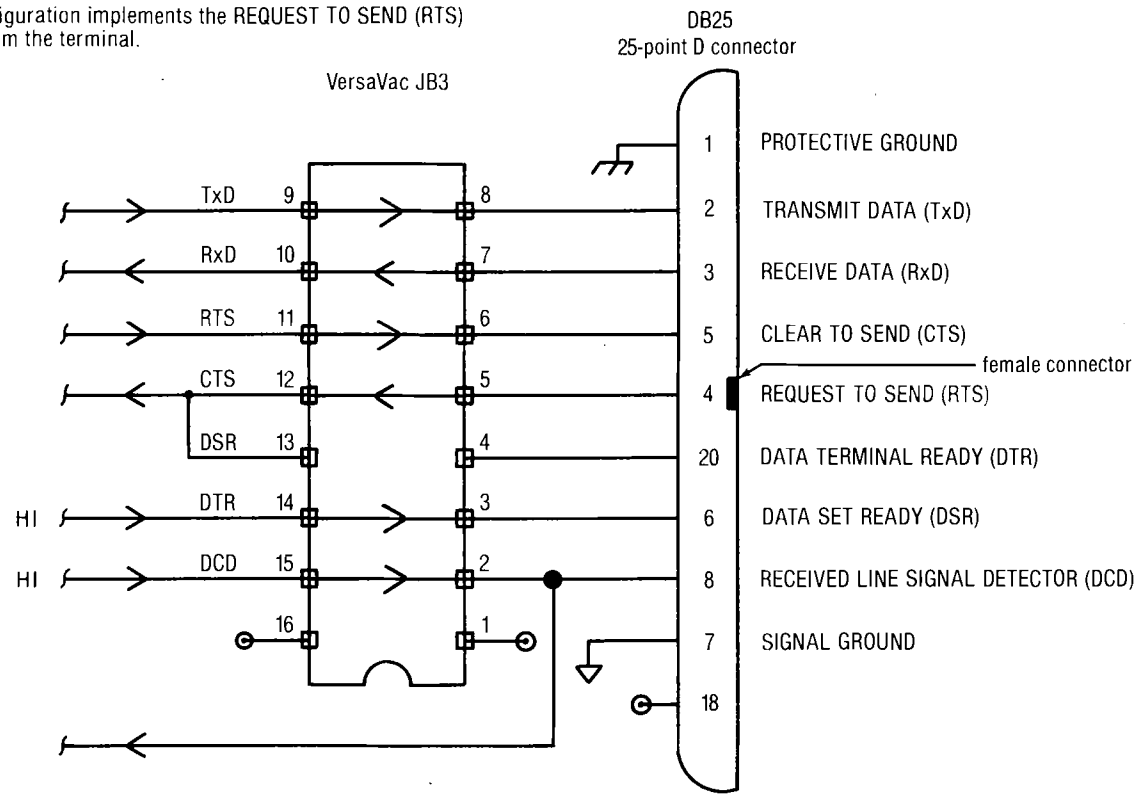

b) This configuration implements the DATA TERMINAL READY (DTR) signal from the terminal.

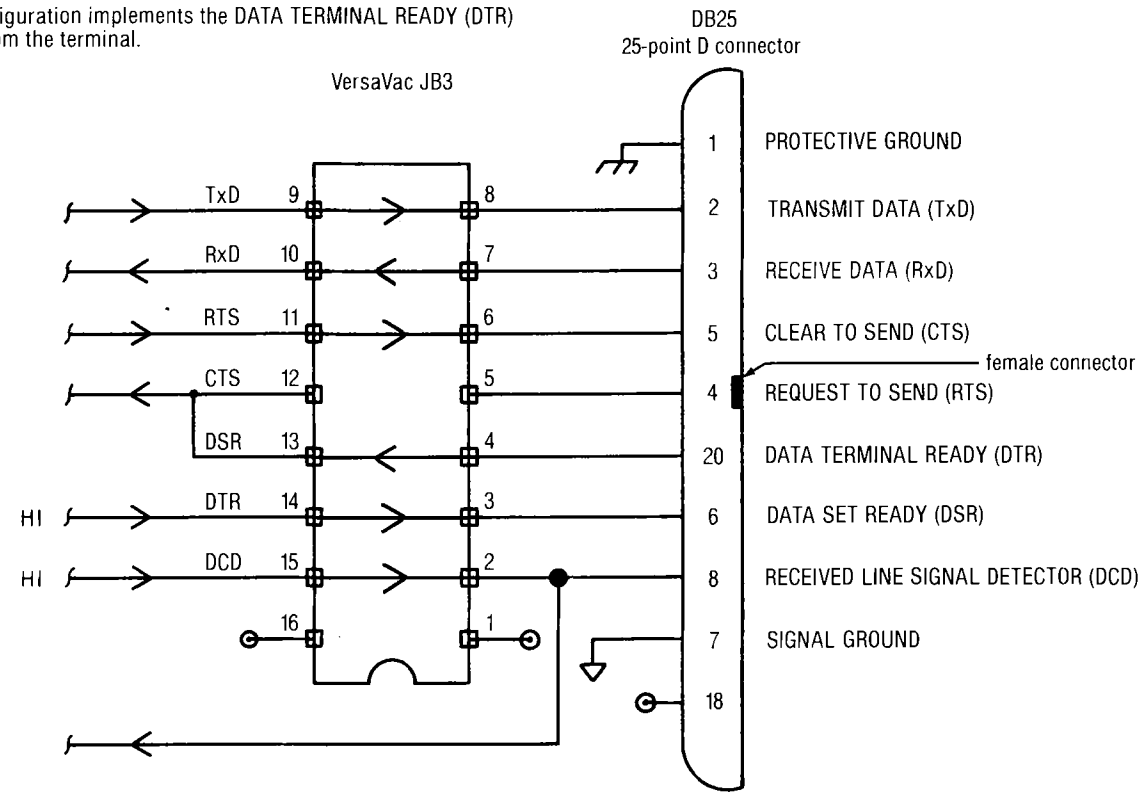

Figure 8.2 Examples of configurations for connecting the VersaVac to a modem or computer

a) This configuration implements the CLEAR TO SEND (CTS) signal. CTS must be sent by the data communications equipment (DCE). If the DATA CARRIER DETECT (DCD) signal is required by the DCE, connect JB3, pin 15, to JB3, pin 2.

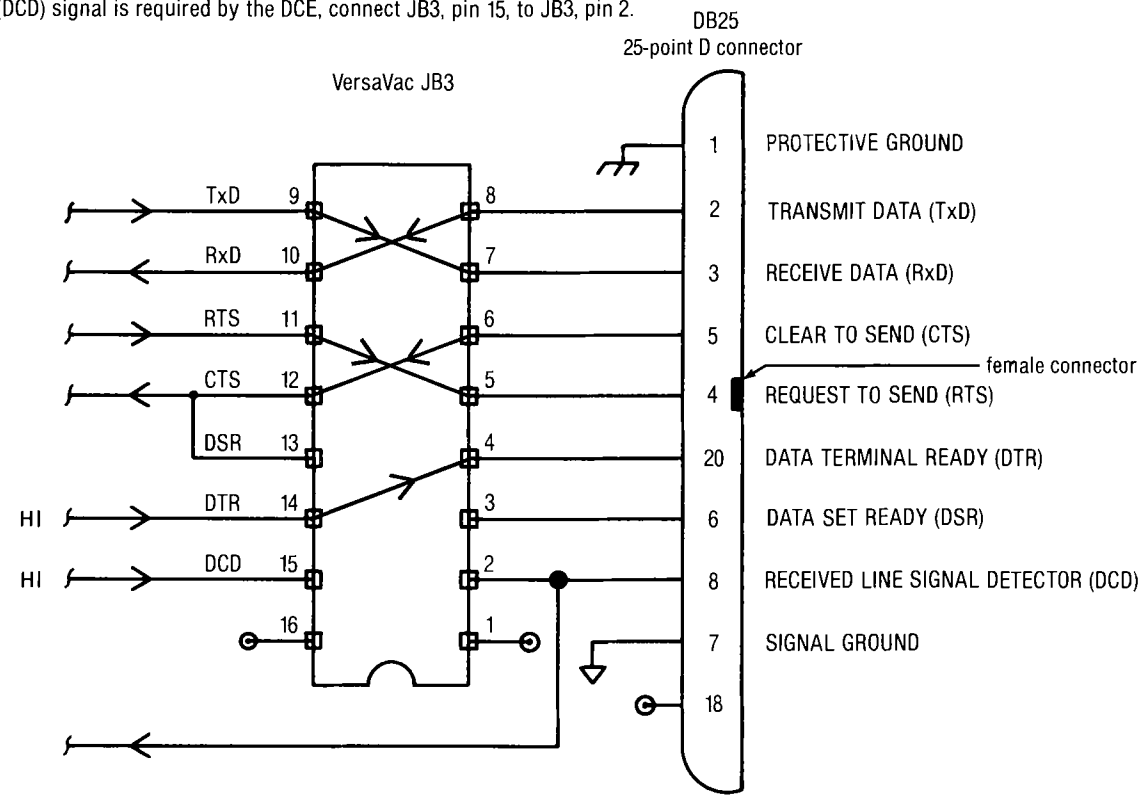

b) This configuration implements the DATA SET READY (DSR) signal. DSR must be sent by the modem or computer. If DCD is required by the modem/computer, connect JB3, pin 15, to JB 3, pin 2.

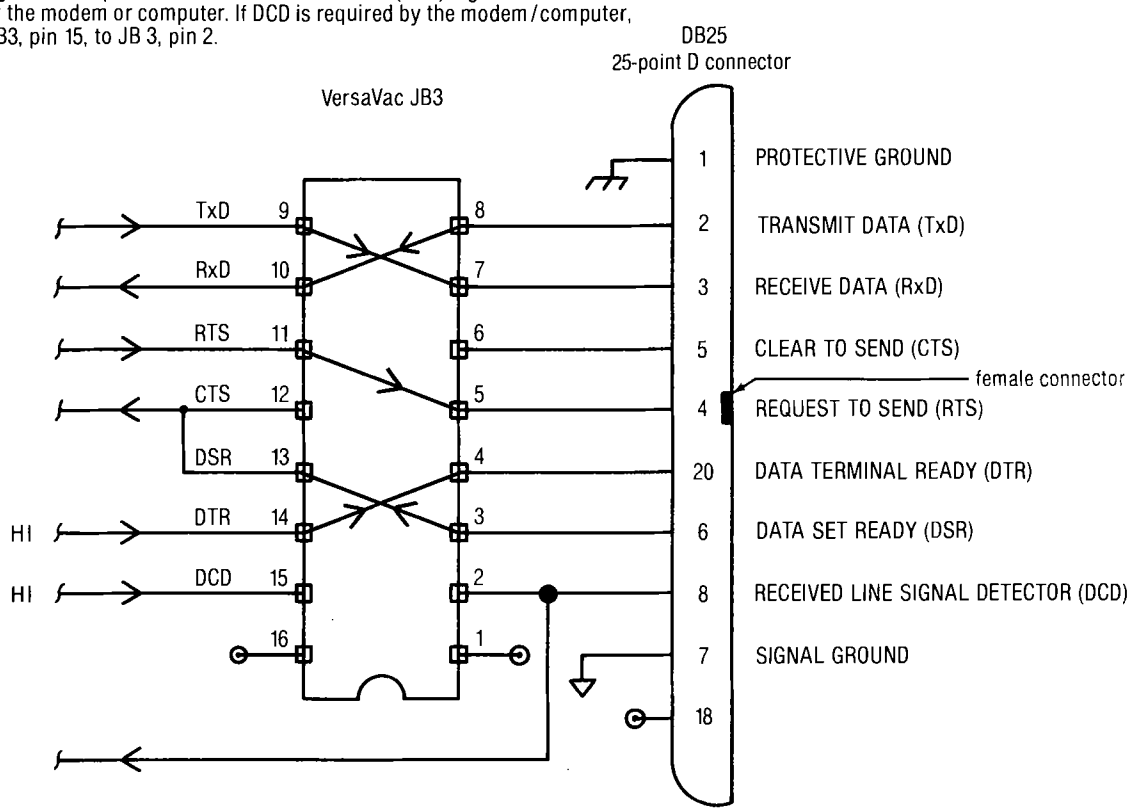

8.3.4 Sample RS232C Test Setup

8.3.4.1 Components

a) a tested VersaVac 5 thermocouple/ionization gauge with an RS232C board installed (see figure 8.3 for the test configuration)

b) a CRT terminal (Lear Siegler model ADM-3A) with a selectable baud rate switch

c) 36-in. ribbon cable, 25 conductor, with 1 DB female connector and 1 DB 25 male connector

d) a calibrated thermocouple gauge tube and cable

e) a sealed ionization gauge tube and cable

8.3.4.2 Terminal configuration. Set the switches for

a) 1/2 duplex

b) RS232C

c) automatic line feed (don't care)

d) upper case

e) even parity

f) 7 bits, 1 stop bit

g) parity enable

h) 8-0 data bits

8.3.4.3 Test configuration.

a) Attach the ribbon cable between the VersaVac RS232C connector and the modem connection on the terminal.

b) Attach the calibrated thermocouple tube and the ionization gauge tube to the VersaVac gauge.

Figure 8.3 RS232C PC board test configuration

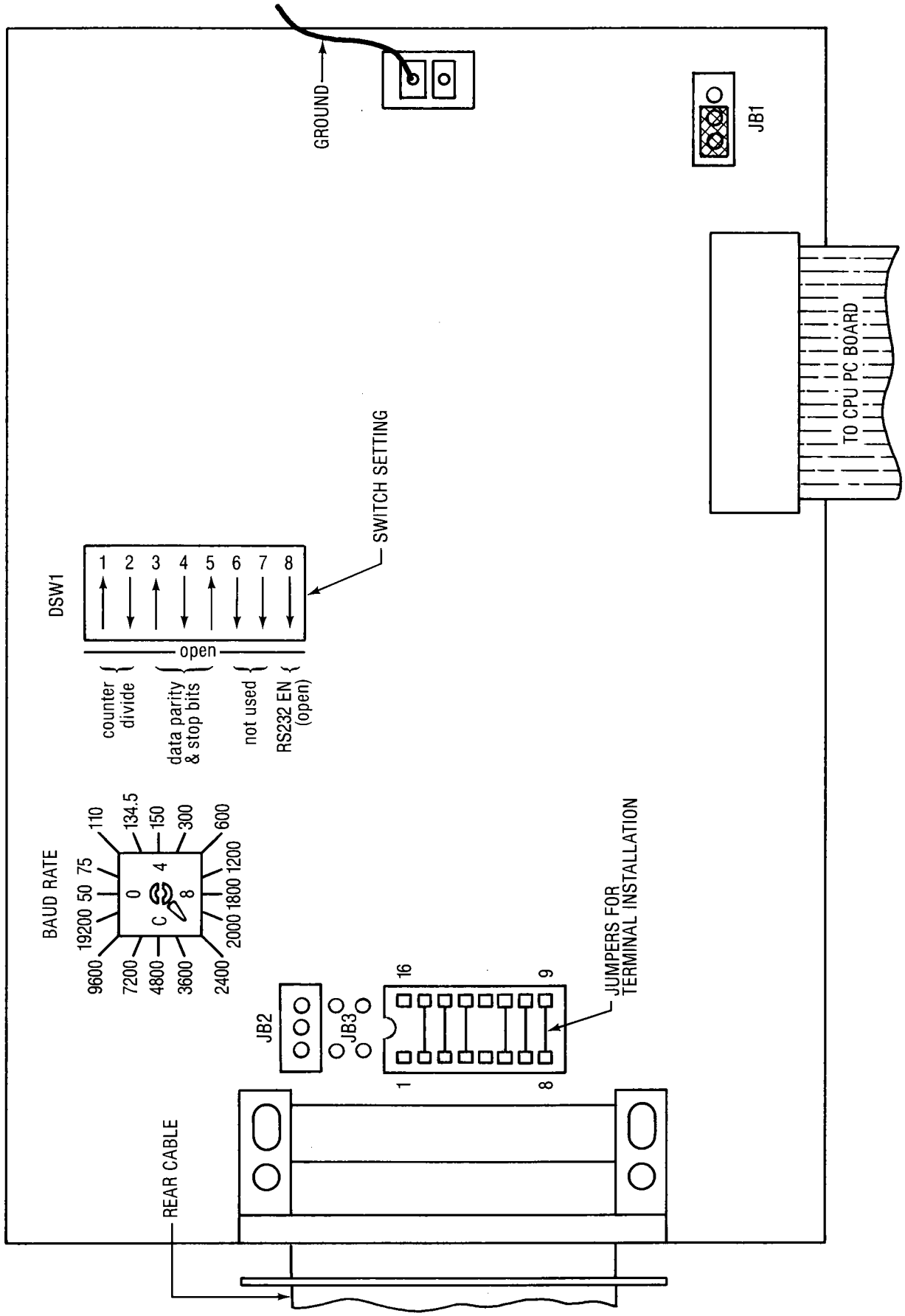

8.3.4.3 (continued)

c) Select a baud rate of 75 on both the RS232C board and the terminal.

d) Switch on the power and perform the test (section 8.3.4.4).

8.3.4.4 Test

a) Referring to section 8.2.1, issue some or all of the following commands in the selected baud rate:

Terminal input	Response to terminal
CR	=
123XYZ (random)	?
R10	XY-E (current pressure)
R11	XY-E (set point)
W6112-7	writes set point
R61	reads above set point

b) Try other codes as described in section 8.2.1.

c) Advance the baud rate selectors to the next mutually available rate and repeat the test.

VERSAVAC REINSTALLATION AFTER REPAIR/CALIBRATION

1. Test data has been entered into the setpoints for both the thermocouples and the ion gauge in order to verify their proper operation. The test data may be different than the data required for operation of the vacuum system. Verify that the setpoint data is correct for system operation and reenter correct data if required.

2. Thermocouple Gauge operation has been tested and the "full-scale" and "zero-scale" pots have been adjusted using a DV-6M standard. Because of small differences between individual Thermocouple tubes, the Thermocouple circuits must be recalibrated for the tubes that will actually be used in operation. The Thermocouple Gauge Tube calibration procedure is included for that purpose.

6.2.3 Calibrating a Thermocouple Gauge Tube (photograph 3 or 4)

Thermocouple gauge tubes TC1 through TC5 must be calibrated when the VersaVac gauge is first installed in a vacuum system and whenever a new tube replaces a used tube. (These thermocouple gauge tubes must be at thermal equilibrium in order to give accurate readings.) To achieve this, make two interdependent adjustments on each thermocouple gauge circuit on the power supply PC board: a fullscale adjustment and a zero-scale adjustment.

NOTE

Since these adjustments are interdependent, repeat the procedure at least once, always ending with the zero-scale adjustment.

6.2.3 (continued)

a) Switch off the front-panel POWER rocker switch, and unplug the input power cable.

b) Remove the top cover from the unit.

c) Reconnect the input power cable, and switch the POWER rocker switch on.

d) Initially, adjust to center rotation both the zero-scale and the fullscale trimmer potentiometers (located on the power supply PC board) for all thermocouple circuits to be calibrated. These are 4-turn trimmer potentiometers without end stops; to obtain the center rotation, make 5 turns in one direction and then rotate 2 turns in reverse.

e) Adjust the fullscale trimmer potentiometer as follows.

1) Back-fill the vacuum chamber with nitrogen to a pressure of 1 torr (1000 microns/133 pascal). Use a capacitance manometer gauge (or equivalent) to determine this pressure.

2) Adjust the fullscale trimmer potentiometer for the thermocouple being calibrated so that the front panel bar graph reading for that thermocouple indicates exactly 1000 microns.

f) When pressure in the vacuum chamber being measured is exactly 1 micron (0.133 pascal), adjust the zero-scale trimmer potentiometer so that exactly 1 segment illuminates on the related bar graph.

Repeat for each thermocouple to be calibrated.

g) Switch off the front-panel POWER rocker switch, and unplug the input power cable.

h) Reattach the top cover on the unit.